INTRODUCTION

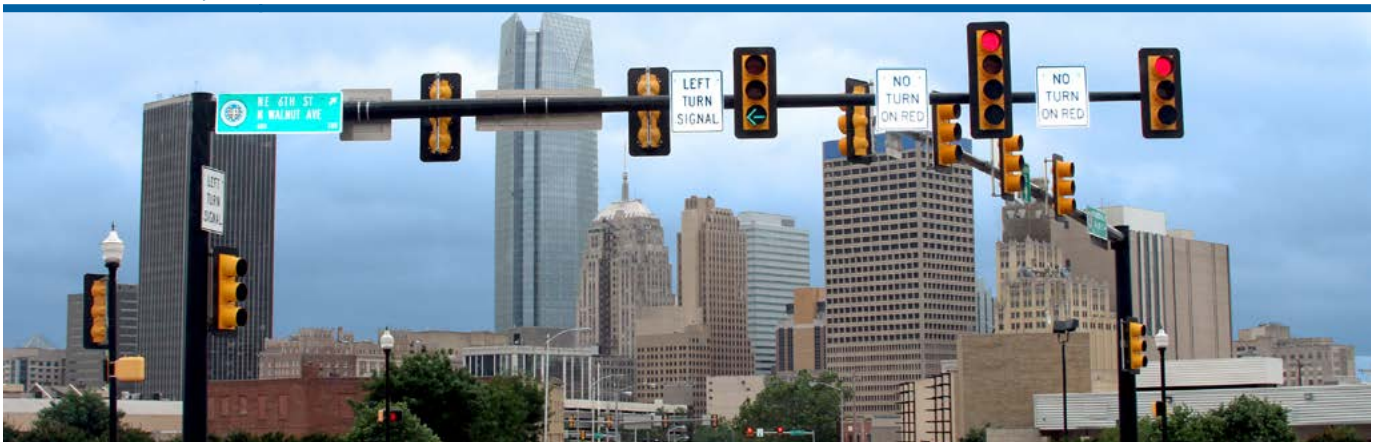

Pelco Products, Inc. meets the needs of the traffic industry around the world by providing top quality products. Pelco's innovative designs lead the way with products that withstand the dynamic effects of nature, while adding value to any project. Utilizing the latest in technology and streamlined manufacturing, Pelco offers a complete line of traffic products and accessories. As an ISO 9001 certified company, Pelco is dedicated to meeting the needs of our customers while adhering to regulatory requirements based on quality management principles.

Astro-Brac
Introduced in 1968, the Astro-Brac family of signal, sign, and camera mounts has proven to be the most versatile mounting system ever designed. With continual improvement of the Astro-Brac product line, Pelco can provide a solution for virtually any mounting requirement. Available in various style clamp kits with band, cable, or tenon mount, the Astro-Brac can mount to any shape of mast arm or pole.

Signal Mountings
Post Top, Side-of-Pole, Span Wire, or Mast Arm mounts in aluminum, iron, or bronze can provide the solution to any traffic mounting application while meeting municipalities standard specifications.

IntelliCross, Push Buttons & Stations
Pelco's IntelliCross APS turns an intersection into a fully actuated pedestrian intersection. Modular Pedestrian Stations offer a versatile flexable option for various sign sizes. Pelco's durable Push Buttons are available in many switch combinations, including the Passport Piezo and those that meet the American with Disablities Act.

Backplates & GPL's
Pelco offers a wide variety of ABS vacuum formed backplates in both standard and louvered styles, to fit inline and cluster signal head configurations. The Pelco GPL is an easy to install signal louvering system, designed for both lane control and sight distance applications. It offers a less expensive alternative to standard OPS signal heads.

Signal Poles & Bases
Pelco's cast aluminum Square Pedestal Base is FHWA certified which meets or exceeds AASHTO break-away requirements. Pelco also offers round, tapered and fluted poles in aluminum, steel and fiberglass.

Mounting Components
Pelco maintains the industries most extensive line of individual hardware and replacement items.

Lighting Solutions & Signage
Pelco offers a variety of luminaires, customized for specific requirements, as well as poles, arms, bases, and anchors for mounting them. A variety of mounting assemblies are also available for MUTCD compliant or custom signage.

Flasher Cabinets, Camera & Sensor Mounts, Mast Arms & Poles, Disconnect Hangers, Decorative Bases
These and many other products are illustrated in our standard catalog. Visit www.pelcoinc.com to view our catalog online or request a paper copy to be mailed to your business address.

Special Applications
Pelco Products, Inc. has always strived to provide the industries best source for products that fill special and unique mounting applications. Our design and engineering capabilities have resulted in hundreds of assemblies that, over the years, have solved mounting problems for customers all over the world. If you do not find the product you need in our standard catalog, contact Pelco Products, Inc. We may have an existing assembly to meet your needs.

ISO 9001 www.intlcert.com

TABLE OF CONTENTS

- Product Index
- Part Numbering System
- Coatings
- Conversion Chart
- Terms and Conditions
- Shipping Notice
- Warranty
- Product Sections T1 - T16

PRODUCT INDEX

Astro-Brac Signal Mountings T1
Bracket Assy's, Clamp Kits, Arm Kits, Tubes, Hardware Kits

Free-Swinging Signal Mountings T2
1-Way, 2-Way, Clusters, Disconnect Hangers, Tethers, Hardware Kits

Rigid Side-of-Pole T3
1-Way, 2-Way, Tandem, Terminal Compartments

Rigid Post Top T4
Slip Fitters, 1-Way, 2-Way, Terminal Compartments

Rigid Tenon Mount T5
Plumbizers, Mast Arm Hangers

Sign Mountings T6
Astro Sign-Brac, Mast Arm Mounts, Span Wire Sign Hangers

Camera Mountings T7
Astro-Brac, Mast Arm, Side-of-Pole, Span Wire

Pedestrian Push Buttons T8
Intellicross, Piezo, Round, Rectangular, Stations, Signs

Cabinets T9
Flasher Controllers, Cabinets, Mounting Assy's, Locks

Backplates T10
Vacuum Formed, Reflective, Flat, Louvered, Split

Poles & Bases T11
Pedestal Bases, Plastic Doors, Poles, Caps, Anchor Bolts

Mast Arms & Poles T12
Ornamental Bases, Pole & Arm Clamps, Mast Arms & Poles, ITC Assy's, Foundation Anchors

Traffic Accessories T13
GPL's, Visors, Confirmation Lights, Copper Safe©

Components T14
Pipe Fittings, Span Wire, Balance Adjusters, Hubs & Mounting Brackets, Banding, Buckles

Lighting Poles T15
Luminaires, Lighting Arms, Poles, Bases, Banner Bracs

Decorative Signage T16
Regulatory Signs, Street Name Signs, Sign Frames, Sign Mounts, Sign Posts

ISO 9001
www.intlcert.com

PART NUMBER SYSTEM

Following is a typical example of how to construct a unique part number for ordering. Options such as signal section, cable length, stainless upgrade, etc., should be indicated by filling in the blank boxes with specific information as shown below. All part numbers should consist of the base part number and at least a finish or coating suffix.

Example:

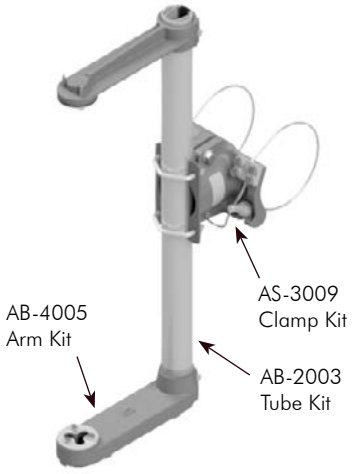

Astro-Brac Stellar Assy, 1-Way Cable Mount

	Signal Section		Cable Length		Cable		Coating
AS-0125	- [3]	-	[62]	-	[ ]	-	[P33]
	1=1 Sec 2=2 Sec 3=3 Sec 4=4 Sec 5=5 Sec		See Note		Blank=Galv SS=Stainless		PNC=Process No Color P_ _=Paint

Note:
Cable Length: 62", 84", 96", 110", 120", 132", 144", 220", or 280".

Part Number
AS-0125-3-62-P33

Signal Section
Cable Length
Coating

Astro-Brac Assembly, Stellar Mount, 1-Way for 3-Section Signal w/ 62" Galv Cable, Powder Coat Gloss Black

- Pelco's standard products with typical options are shown in this catalog. Special options are often available upon request.
- State Specials and Customer Specific Specials are not included in this catalog.
- All information is assumed to be correct at the time of printing. For the most up-to-date information, please check Pelco's online catalog at www.pelcoinc.com

COATINGS

CODE	COATING
PNC	Process No Color
BOX	Black Oxide
BRS	Brass
CRM	Chrome
EC1	E-coat Black
GLV	Galvanized
ZN1	Zinc Bright
ZN2	Zinc Yellow
P_ _	Paint *(add color #)*

POWDER COAT STANDARD COLORS

P29	Federal Yellow
P30	Automatic Green
P33	Gloss Black
P34	Flat Black
P36	New York State Green (forest)
P38	Louisiana Green
P39	Bronze
P40	Silver

WET PAINT STANDARD COLORS

P01	Federal Yellow
P03	Flat Black
P04	Gloss Black
P05	New York State Green (forest)
P06	Automatic Green (dark olive)
P16	Industrial Red Primer
P22	Gloss White (industrial enamel)

POWDER COAT SPECIAL COLORS

(SUBJECT TO SPECIAL SETUP CHARGE)

P28	Sun Gold (w/ clear top coat)
P32	Clear Coat
P35	Iron Gray
P40	Silver (w/ clear top coat)
P44	Antique Black Matte
P45	Super Wet White
P46	Brown Rust
P47	Brown Base
P48	Gray Primer (zinc rich)
P49	Cratered Pewter
P51	Cratered Bronze
P61	Blood Red
P62	MDC Gray
P63	Mocha Brown
P64	KOMO Bronze
P69	Brushing Brown
P71	Dark Green
P74	Bottle Green
P75	Fir Green
P76	Forest Green
P79	Dark Sepia Brown

Note:
Pelco can match your custom colors.
Please provide the following and contact Pelco for pricing.
- For custom powder: RAL number or paint chip.
- For wet paint: Federal Standard 595 paint code or paint chip.

Special setup and paint charge will apply.

ISO 9001 www.intlcert.com

CONVERSION CHARTS

Astro-Brac Band Length Stellar, Atlas	
Band Length	**Max Pole Diameter**
29″	7.3″
36″	9.6″
42″	11.5″
48″	13.4″
56″	15.9″
72″	21.0″
84″	24.8″
96″	28.7″
114″	34.4″

Astro-Brac Cable Length Stellar, Atlas, Galaxy		
Cable Length	**Max Pole Diameter**	**Pole Dia w/ Ty-back**
62″	7.0″	4.5″
84″	10.5″	7.6″
96″	12.4″	9.6″
110″	14.6″	11.8″
120″	16.2″	13.4″
132″	18.2″	15.3″
144″	20.1″	17.2″
220″	32.2″	29.3″
280″	35.0″	35.0″

Astro-Brac Band Length Mini-Brac, Triton	
Band Length	**Max Pole Diameter**
29″	7.3″
36″	9.6″
42″	11.5″
48″	13.4″
56″	15.9″
72″	21.0″
84″	22.0″

Astro-Brac Cable Length Mini-Brac, Triton	
Cable Length	**Max Pole Diameter**
45″	11.1″
62″	16.6″
84″	22.0″

Note:
Circumference to Diameter Conversion
Circumference ÷ pi = Diameter
Example: (12″ ÷ 3.14) = 3.82″

TUBE LENGTH Standard & Tri-Bolt Signals	
23″	1-section 12″
37″	2-section 12″ & 5-section cluster
46″	3-section 12″
58″	4-section 12″
74″	5-section 12″

TUBE LENGTH 1-1/2″ NPS OPS Signals	
50″	3-section 12″
66″	4-section 12″
82″	5-section 12″

TERMS & CONDITIONS

PAYMENT TERMS
Net 30 Days.
A 1½% per month (18% APR Service Charge) will be assessed on invoices whose payment has not been received within 45 days.

CREDIT CARD TERMS
We accept American Express, Mastercard, Visa, and Discover. A service fee of 3% will be added to all invoices. Credit Card will be charged prior to shipment.

CREDIT HOLD
Accounts over 90 Days will be placed on credit hold and remain so until brought current including Service Charges. Orders on credit hold will be pulled from production and will only be rescheduled for shipment after release from credit hold.

MINIMUM BILLING
A $20.00 Minimum Service Charge will be assessed to each order for $50.00 or less.

F.O.B. POINT
Edmond, Oklahoma unless otherwise quoted.

PRICING
As stated in Price Schedule, *prices are subject to change without notice.*

QUOTATIONS
Pricing on quotations is firm for 30 days from date of quotation unless otherwise indicated. Please reference quotation when ordering.

CANCELLATIONS
Orders cancelled for stock items will be assessed at a minimum of 10% of net value.
Orders cancelled for special or non-stock items will be assessed at a minimum of 20% of net value.

CUSTOMER PICK UP
Customer pick up requests will be accommodated. A 10% service charge will apply if not picked up within 30 days of notification of completion of order.

SHIPMENT & DELIVERY
Pelco is very diligent in selecting the most competent and economical carrier. However, upon written request Pelco will use a carrier of your specific choice. See Shipping Notice, in the Reference Section of this catalog, for shipment specifics and freight claims.

RETURNED GOODS
In order to expedite handling, written authorization must accompany all returned goods. Upon request, a Returned Merchandise Authorization (RMA) will be issued and must be used. Use this RMA as a packing list when returning a shipment. A restocking fee plus freight charges shall be assessed against the return of goods unless return of goods was due to an error of Pelco.

REQUESTS FOR CERTIFICATIONS
Representative material test reports are available on request for most Pelco products. If your order contains materials that require lot or heat treat number traceability, or if the materials must be of domestic origin, those requirements must be clearly stated at the time your order is placed.

ISO 9001
www.intlcert.com

Shipping Notice included with each shipment:

NOTICE

SHIPMENTS MADE WITH FACTORY AS F.O.B. POINT

-CARRIER HAS ACCEPTED SHIPMENT IN GOOD CONDITION-
LOST OR DAMAGED GOODS ARE THE CARRIER'S RESPONSIBILITY in all shipments of this type.

PELCO'S Responsibility For This Shipment Has Now Ceased.

CHECK YOUR SHIPMENT CAREFULLY WHEN DELIVERED to see that it is in good order and received complete. When packages check short or are in bad condition, have the Carrier's agent make notation of this fact in detail on the freight bill or express receipt and then require that he sign it.

LOST OR DAMAGED GOODS ARE THE CARRIER'S RESPONSIBILITY in all LTL (less than truckload) shipments. In TL (truckload) shipments, the Carrier is responsible for damage to exposed surfaces of the goods (top and ends) caused by collision with other vehicles or objects when the Carrier is negligent, and by loading other freight on or against Pelco goods. When the trailer itself shows evidence of fresh damage, call at once for inspection of the contents just as though it were an LTL shipment.

CONCEALED LOSS OR DAMAGE DISCOVERED AFTER DELIVERY of shipment must be reported to the delivering Carrier upon discovery, and in any event within 15 days after receipt. Hold goods, containers, and packing materials in exact condition as found for inspection by the Carrier. An inspector for the Carrier should call within 48 hours. If nothing is heard in that time, notify them by registered mail and get a receipt. The Carrier will issue an inspection report and give you a copy which must be used to support your claim.

FAILURE TO COMPLY WITH ANY OF THE FOREGOING REGULATIONS IS REGARDED AS INDICATING COMPLETE DELIVERY OF FREIGHT IN GOOD CONDITION.

Make Your Claim Promptly
Carrier Will Not Consider a Claim Unless Presented Within 9 Months After Receipt of Shipment.

IMPORTANT!

DO NOT DEDUCT THE AMOUNT OF LOSS OR DAMAGE from Pelco invoice while awaiting adjustment of a claim, as we can not guarantee safe delivery for actions beyond our control.

Please do not return goods to Pelco or instruct Carriers to return goods without first securing written authorization and shipping instructions.

SHIPMENTS MADE WITH DESTINATION AS F.O.B. POINT

-CARRIER HAS ACCEPTED SHIPMENT IN GOOD CONDITION-

CHECK YOUR SHIPMENT CAREFULLY WHEN DELIVERED to see that it is in good order and received complete.

When packages check short or are in damaged condition, have the carriers agent make notation of this fact on the freight bill or express receipt, and then require that he sign it.

Check your shipment immediately to make sure the contents agree with the Pelco packing list enclosed and to determine if any damage has occurred during transit.

Any shortages and or concealed damages MUST be reported to Pelco within 10 DAYS.

FAILURE TO COMPLY WITH THE FOREGOING IS REGARDED AS AN INDICATION THAT YOUR SHIPMENT HAS ARRIVED IN SATISFACTORY CONDITION AND THAT IT IS COMPLETE AS SHOWN ON OUR PACKING LIST.

Please do not return damaged goods to Pelco without first securing authorization and shipping instructions.

Pelco will make every effort possible to effect prompt correction of any short or damaged goods when claims are made within these guidelines.

PELCO PRODUCTS, INC.

320 W. 18th St.
Edmond, OK 73013
(405)340-3434 FAX:(405)340-3435

ISO 9001
www.intlcert.com

WARRANTY

General: All statements, technical information and recommendations contained in Pelco Product Brochures and Bulletins are based on tests Pelco believes to be reliable. However, the accuracy or completeness thereof is not guaranteed and the following is made in lieu of all warranties, expressed or implied:

Limited Warranty: Pelco's only obligations shall be to replace such quantity of the product proven to be defective.

Repair or replacement of any product will be made at Pelco's facilities. The extent of repair or replacement is at Pelco's discretion. Transportation to and from Pelco's facilities is the responsibility of the buyer.

Pelco shall not be liable for injury, loss or damage direct or consequential arising out of the use of, or the inability to use the product. Before using, user shall determine the suitability of the product for his intended use, and assumes all risk and liability whatsoever in connection therewith. No statement or recommendation not contained herein shall have any effect unless in an agreement signed by the officers of Pelco Products Inc.

Warranty Period: Unless otherwise noted, standard product warranty is 12 months from date of shipment.

Contact Pelco for complete warranty details and exclusions.

1-Way Assemblies

Designed to accommodate all traffic signals, with the exception of optically programmed (see pages T1-18 through T1-21).
The Galaxy and Stellar Astro-Brac series feature all-axis adjustability and are designed to facilitate the mounting of any size signal to any shape mast arm or pole.

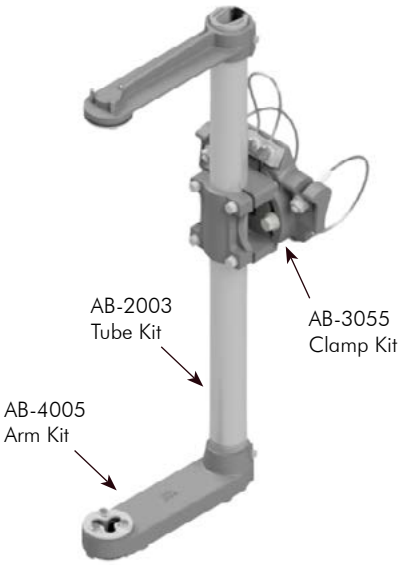

Astro-Brac Galaxy Assy, 1-Way Cable Mount

	Signal Section		Cable Length		Cable		Coating
AG-0125	- [ ]	-	[ ]	-	[ ]	-	[ ]
	1=1 Sec 2=2 Sec 3=3 Sec 4=4 Sec 5=5 Sec		See Note		Blank=Galv SS=Stainless		PNC=Process No Color P_ _=Paint

Note:
Cable Length: 62", 84", 96", 110", 120", 132", 144", 220", or 280".

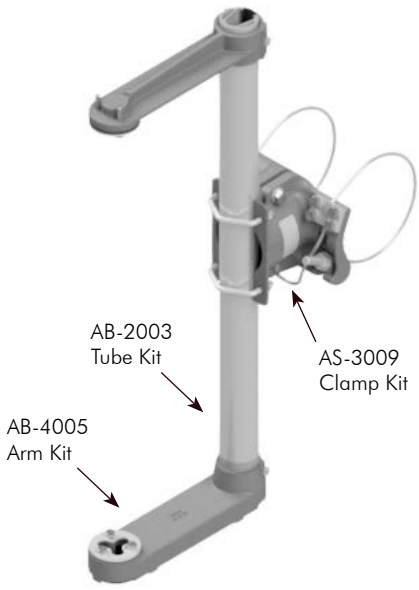

Astro-Brac Stellar Assy, 1-Way Cable Mount

	Signal Section		Cable Length		Cable		Coating
AS-0125	- [ ]	-	[ ]	-	[ ]	-	[ ]
	1=1 Sec 2=2 Sec 3=3 Sec 4=4 Sec 5=5 Sec		See Note		Blank=Galv SS=Stainless		PNC=Process No Color P_ _=Paint

Note:
Cable Length: 62", 84", 96", 110", 120", 132", 144", 220", or 280".

Note: 1. All assemblies are supplied standard with stainless steel slotted washers and fasteners.
2. See Reference Section page iv for cable and band clamp kit pole diameters.
3. See Reference Section for available paint colors.

1-Way Assemblies

Designed to accommodate all traffic signals, with the exception of optically programmed featured on pages T1-18 and T1-21.
The Galaxy and Stellar Astro-Brac series feature all-axis adjustability and are designed to facilitate the mounting of any size signal to any shape mast arm or pole.

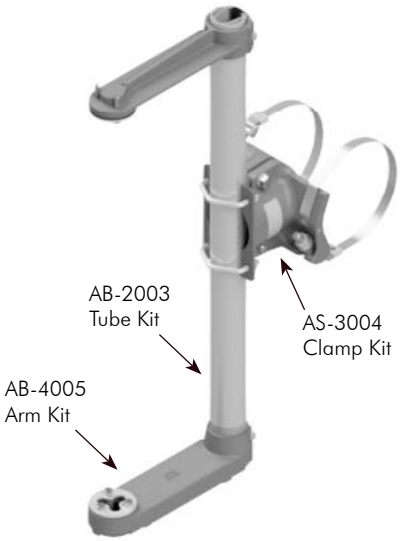

Astro-Brac Stellar Assy, 1-Way Band Mount

AS-0116 - [Signal Section] - [Band Length] - [Clamp Screw] - [Coating]

Signal Section	Band Length	Clamp Screw	Coating
1=1 Sec 2=2 Sec 3=3 Sec 4=4 Sec 5=5 Sec	See Note	Blank=Galv SS=Stainless	PNC=Process No Color P_ _=Paint

Note:
Band Length: 29", 36", 42", 48", 56", 72", 84", 96", or 114".

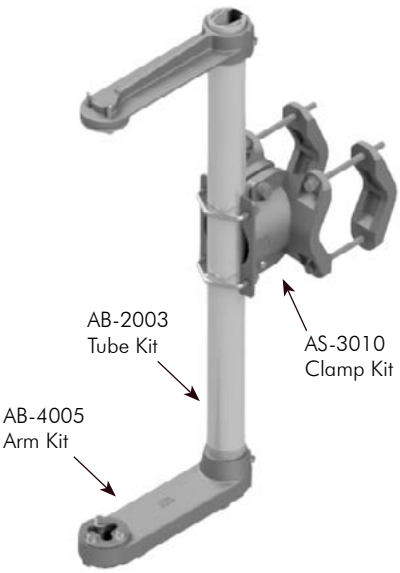

Astro-Brac Stellar Assy, 1-Way Tenon Mount

AS-0137 - [Signal Section] - [Coating]

Signal Section	Coating
1=1 Sec 2=2 Sec 3=3 Sec 4=4 Sec 5=5 Sec	PNC=Process No Color P_ _=Paint

Note:
Fits 1.9" to 4.5" diameter.

Note: 1. All assemblies are supplied standard with stainless steel slotted washers and fasteners.
2. See Reference Section page iv for cable and band clamp kit pole diameters.
3. See Reference Section for available paint colors.

1-Way Horizontal Assemblies

The Astro-Brac easily adapts to mount signals horizontally from a mast arm. When adjustments for skewed angles are necessary, the articulating bracket is a must.

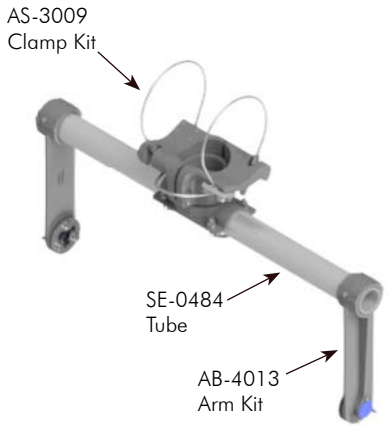

Astro-Brac Stellar Assy, 1-Way Horizontal Cable Mount

AS-0194 - [Signal Section] - [Cable Length] - [Cable] - [Coating]

Signal Section	Cable Length	Cable	Coating
1=1 Sec 2=2 Sec 3=3 Sec 4=4 Sec 5=5 Sec	See Note	Blank=Galv SS=Stainless	PNC=Process No Color P_ _=Paint

Note:
Cable Length: 62", 84", 96", 110", 120", 132", 144", 220", or 280".

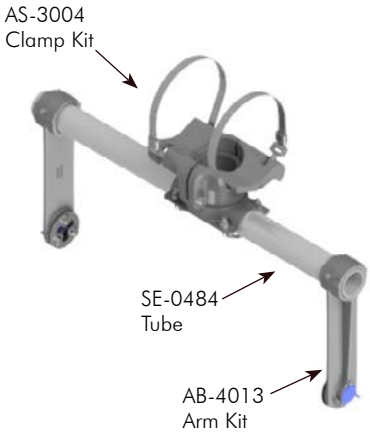

Astro-Brac Stellar Assy, 1-Way Horizontal Band Mount

AS-0124 - [Signal Section] - [Band Length] - [Clamp Screw] - [Coating]

Signal Section	Band Length	Clamp Screw	Coating
1=1 Sec 2=2 Sec 3=3 Sec 4=4 Sec 5=5 Sec	See Note	Blank=Galv SS=Stainless	PNC=Process No Color P_ _=Paint

Note:
Band Length: 29", 36", 42", 48", 56", 72", 84", 96", or 114".

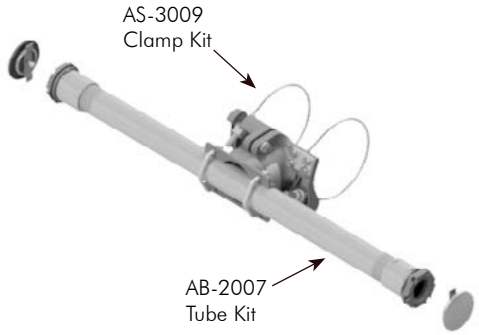

Astro-Brac Stellar Assy, 1-Way w/ Signal Closures Horizontal Cable Mount

AS-0684 - [Tube Length] - [Cable Length] - [Cable] - [Coating]

Tube Length	Cable Length	Cable	Coating
24=24" Tube 36=24" Tube 48=48" Tube	See Note	Blank=Galv SS=Stainless	PNC=Process No Color P_ _=Paint

Note:
Cable Length: 62", 84", 96", 110", 120", 132", 144", 220", or 280".

Note: 1. All assemblies are supplied standard with stainless steel slotted washers and fasteners.
2. See Reference Section page iv for cable and band clamp kit pole diameters.
3. See Reference Section for available paint colors.

1-Way Articulating Assemblies

The Atlas Astro-Brac series is capable of concealing one 3/4" diamenter or two 5/8" diameter conduits. The internal wiring capability and 3 axis of adjustability can handle even the toughest alignment problems and make this system truly universal.

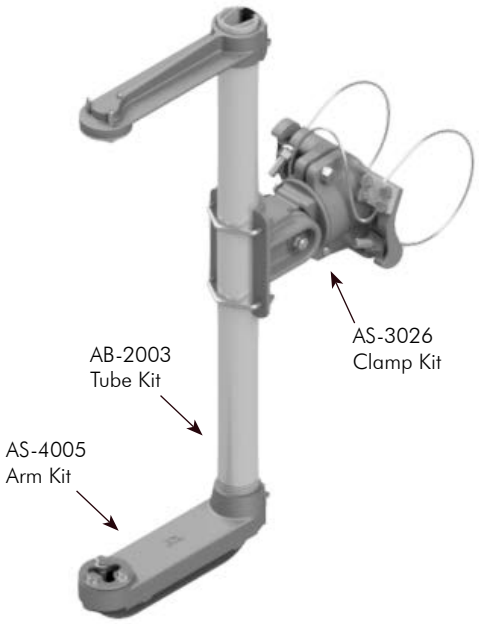

Astro-Brac Atlas Assy, 1-Way Articulating Cable Mount

		Signal Section		Cable Length		Cable		Coating
AS-0150	-	☐	-	☐	-	☐	-	☐
		1=1 Sec 2=2 Sec 3=3 Sec 4=4 Sec 5=5 Sec		See Note		Blank=Galv SS=Stainless		PNC=Process No Color P_ _=Paint

Note:
Cable Length: 62", 84", 96", 110", 120", 132", 144", 220", or 280".

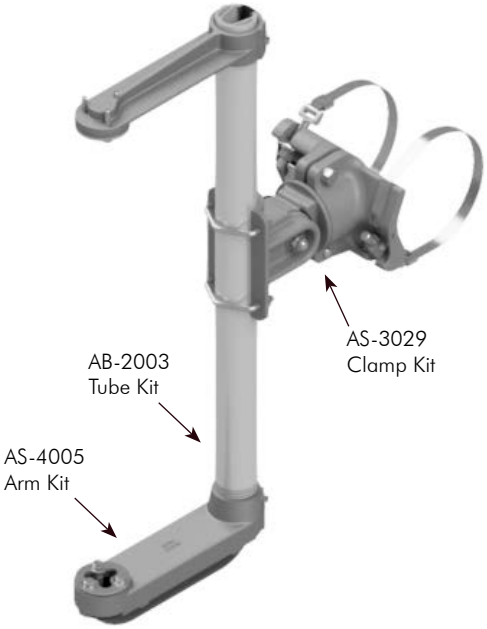

Astro-Brac Atlas Assy, 1-Way Articulating Band Mount

		Signal Section		Band Length		Clamp Screw		Coating
AS-0153	-	☐	-	☐	-	☐	-	☐
		1=1 Sec 2=2 Sec 3=3 Sec 4=4 Sec 5=5 Sec		See Note		Blank=Galv SS=Stainless		PNC=Process No Color P_ _=Paint

Note:
Band Length: 29", 36", 42", 48", 56", 72", 84", 96", or 114".

Note: 1. All assemblies are supplied standard with stainless steel slotted washers and fasteners.
2. See Reference Section for clamp kit pole diameters.
3. See Reference Section for available paint colors.

1-Way Articulating Assemblies

The Atlas Astro-Brac series is capable of concealing one 3/4" diamenter or two 5/8" diameter conduits. The internal wiring capability and 3 axis of adjustability can handle even the toughest alignment problems and make this system truly universal.

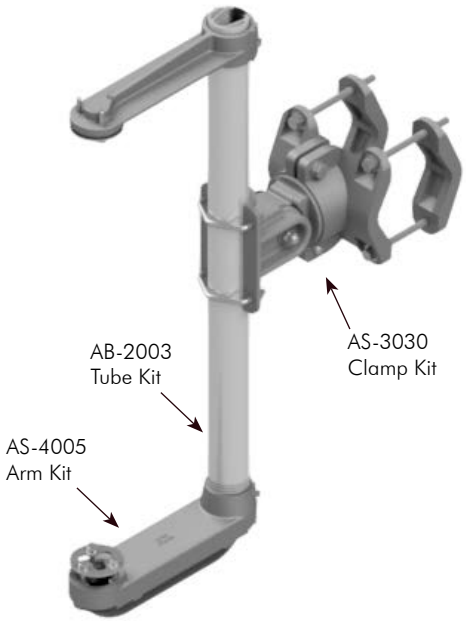

Astro-Brac Atlas Assy, 1-Way Articulating Tenon Mount

		Signal Section		Coating
AS-0154	-	[ ]	-	[ ]

1=1 Sec
2=2 Sec
3=3 Sec
4=4 Sec
5=5 Sec

PNC=Process No Color
P_ _=Paint

Note:
Fits 1.9" to 4.5" diameter.

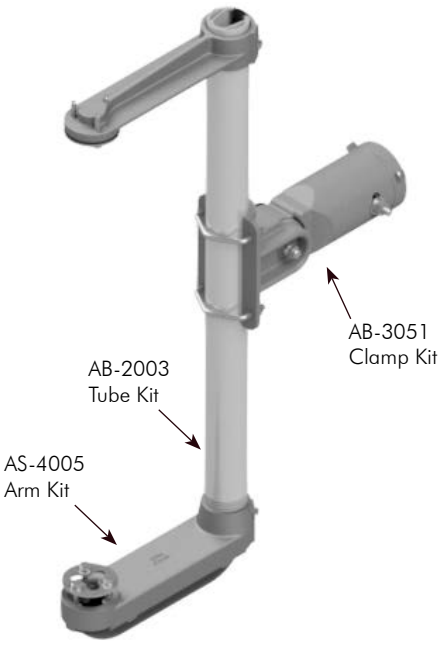

Astro-Brac Atlas Assy, 1-Way Articulating Tenon Mount

		Signal Section		Coating
AS-0149	-	[ ]	-	[ ]

1=1 Sec
2=2 Sec
3=3 Sec
4=4 Sec
5=5 Sec

PNC=Process No Color
P_ _=Paint

Note:
Fits 1.9" diameter.

Note: 1. All assemblies are supplied standard with stainless steel slotted washers and fasteners.
2. See Reference Section for available paint colors.

This page is intentionally left blank.

2-Way Assemblies

Designed to accommodate all traffic signals, with the exception of optically programmed (see pages T1-18 through T1-21).
The Galaxy and Stellar Astro-Brac series feature all-axis adjustability and are designed to facilitate the mounting of 2-way signals on any shape of mast arm or pole.

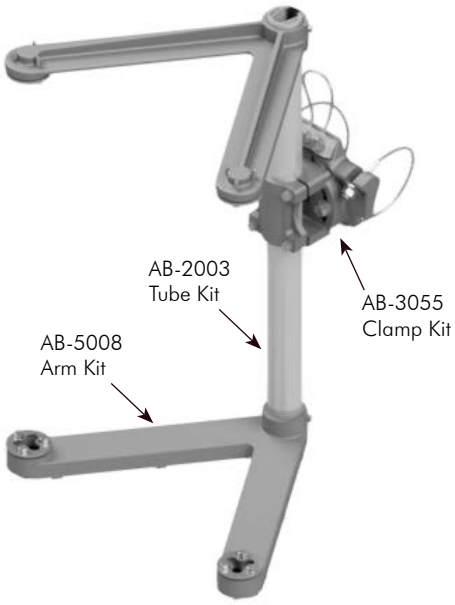

Astro-Brac Galaxy Assy, 2-Way Cable Mount

AG-0188 - [Signal Section] - [Cable Length] - [Cable] - [Coating]

Signal Section	Cable Length	Cable	Coating
1=1 Sec 2=2 Sec 3=3 Sec 4=4 Sec 5=5 Sec	See Note	Blank=Galv SS=Stainless	PNC=Process No Color P_ _=Paint

Note:
Cable Length: 62", 84", 96", 110", 120", 132", 144", 220", or 280".

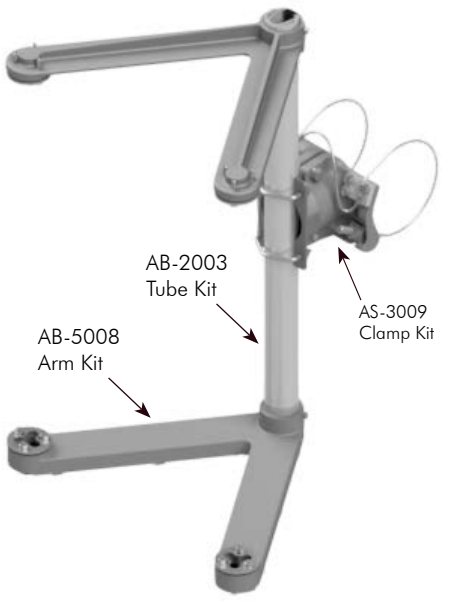

Astro-Brac Stellar Assy, 2-Way Cable Mount

AS-0188 - [Signal Section] - [Cable Length] - [Cable] - [Coating]

Signal Section	Cable Length	Cable	Coating
1=1 Sec 2=2 Sec 3=3 Sec 4=4 Sec 5=5 Sec	See Note	Blank=Galv SS=Stainless	PNC=Process No Color P_ _=Paint

Note:
Cable Length: 62", 84", 96", 110", 120", 132", 144", 220", or 280".

Note: 1. All assemblies are supplied standard with stainless steel slotted washers and fasteners.
2. See Reference Section for clamp kit pole diameters.
3. See Reference Section for available paint colors.

2-Way Assemblies

Designed to accommodate all traffic signals, with the exception of optically programmed (see pages T1-18 through T1-21).
The Stellar Astro-Brac series feature all-axis adjustability and are designed to facilitate the mounting of 2-way signals to any shape of mast arm or pole.

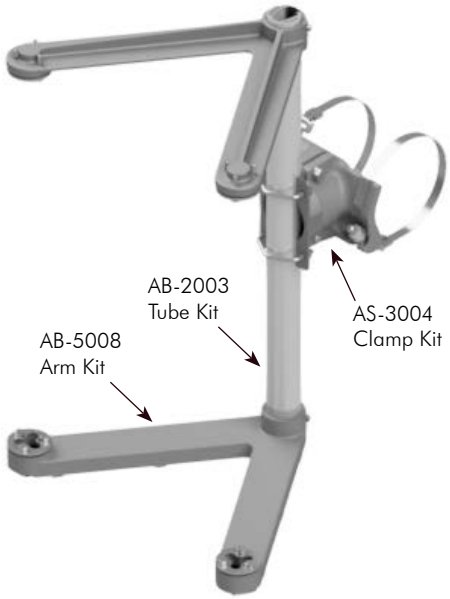

Astro-Brac Stellar Assy, 2-Way Band Mount

	Signal Section		Band Length		Clamp Screw		Coating
AS-0110	- [ ]	-	[ ]	-	[ ]	-	[ ]
	1=1 Sec 2=2 Sec 3=3 Sec 4=4 Sec 5=5 Sec		See Note		Blank=Galv SS=Stainless		PNC=Process No Color P_ _=Paint

Note:
Band Length: 29", 36", 42", 48", 56", 72", 84", 96", or 114".

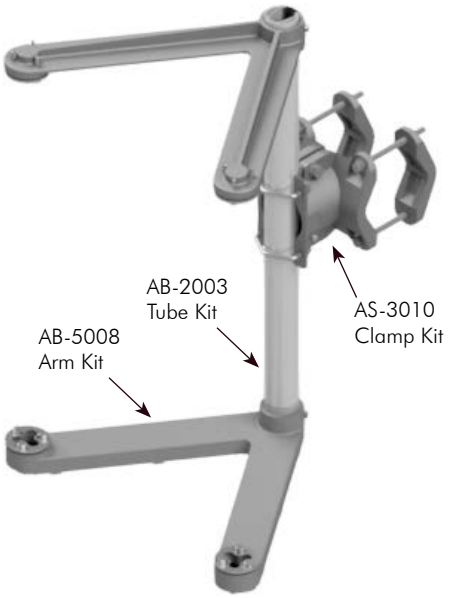

Astro-Brac Stellar Assy, 2-Way Tenon Mount

	Signal Section		Coating
AS-0641	- [ ]	-	[ ]
	1=1 Sec 2=2 Sec 3=3 Sec 4=4 Sec 5=5 Sec		PNC=Process No Color P_ _=Paint

Note:
Fits 1.9" to 4.5" diameter.

Note: 1. All assemblies are supplied standard with stainless steel slotted washers and fasteners.
2. See Reference Section for clamp kit pole diameters.
3. See Reference Section for available paint colors.

ISO 9001
www.intlcert.com

2-Way Variable Assemblies

Designed to accommodate all traffic signals, with the exception of optically programmed (see pages T1-18 through T1-21).
The 2-Way Variable Galaxy and Stellar Astro-Brac features all-axis adjustability and is designed to facilitate the mounting of unbalanced signal combinations to any shape mast arm or pole

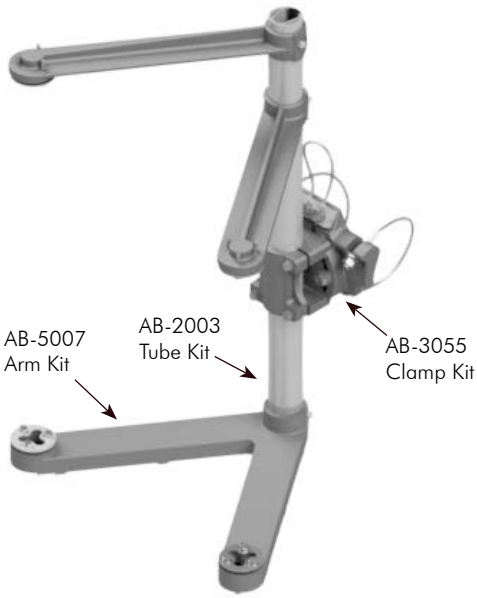

Astro-Brac Galaxy Assy, 2-Way Variable Cable Mount

AG-0193	-	Signal Section ☐	-	Cable Length ☐	-	Cable ☐	-	Coating ☐
		3=3 Sec 4=4 Sec 5=5 Sec		See Note		Blank=Galv SS=Stainless		PNC=Process No Color P_ _=Paint

Note:
Cable Length: 62", 84", 96", 110", 120", 132", 144", 220", or 280".

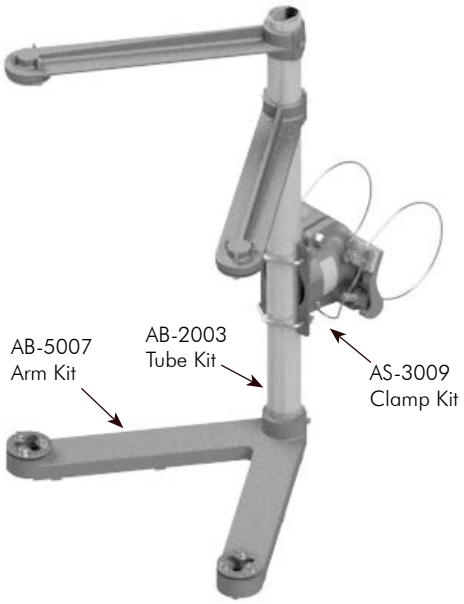

Astro-Brac Stellar Assy, 2-Way Variable Cable Mount

AS-0193	-	Signal Section ☐	-	Cable Length ☐	-	Cable ☐	-	Coating ☐
		3=3 Sec 4=4 Sec 5=5 Sec		See Note		Blank=Galv SS=Stainless		PNC=Process No Color P_ _=Paint

Note:
Cable Length: 62", 84", 96", 110", 120", 132", 144", 220", or 280".

Note: 1. All assemblies are supplied standard with stainless steel slotted washers and fasteners.
2. See Reference Section for clamp kit pole diameters.
3. See Reference Section for available paint colors.

2-Way Variable Assemblies

Designed to accommodate all traffic signals, with the exception of optically programmed (see pages T1-18 through T1-21).
The 2-Way Variable Stellar Astro-Brac features all-axis adjustability and is designed to facilitate the mounting of unbalanced signal combinations to any shape mast arm or pole

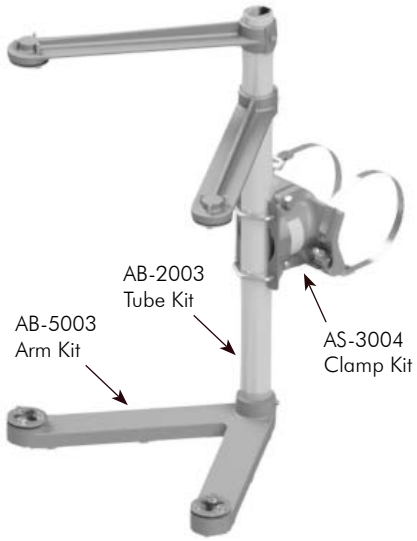

Astro-Brac Stellar Assy, 2-Way Variable Band Mount

AS-0111 - [Signal Section] - [Band Length] - [Clamp Screw] - [Coating]

Signal Section	Band Length	Clamp Screw	Coating
2=2 Sec 3=3 Sec 4=4 Sec	See Note	Blank=Galv SS=Stainless	PNC=Process No Color P_ _=Paint

Note:
Band Length: 29", 36", 42", 48", 56", 72", 84", 96", or 114".

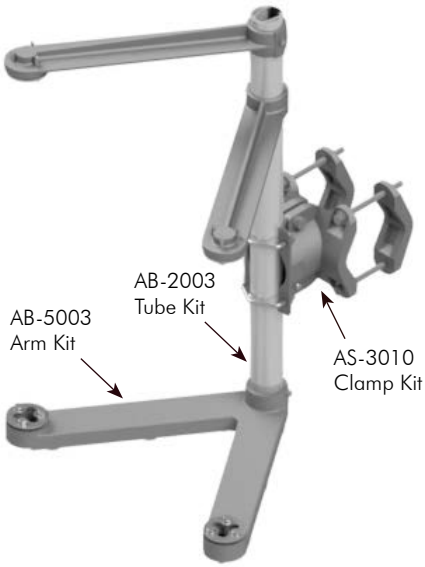

Astro-Brac Stellar Assy, 2-Way Variable Tenon Mount

AS-0642 - [Signal Section] - [Coating]

Signal Section	Coating
3=3 Sec 4=4 Sec 5=5 Sec	PNC=Process No Color P_ _=Paint

Note:
Fits 1.9" to 4.5" diameter.

Note: 1. All assemblies are supplied standard with stainless steel slotted washers and fasteners.
2. See Reference Section for clamp kit pole diameters.
3. See Reference Section for available paint colors.

Cluster Assemblies

Designed to accommodate all traffic signals, with the exception of optically programmed (see pages T1-18 through T1-21).
The Cluster Galaxy and Stellar Astro-Brac features all-axis adjustability and is designed to facilitate the mounting of 5-section signal heads to any shape mast arm or pole.

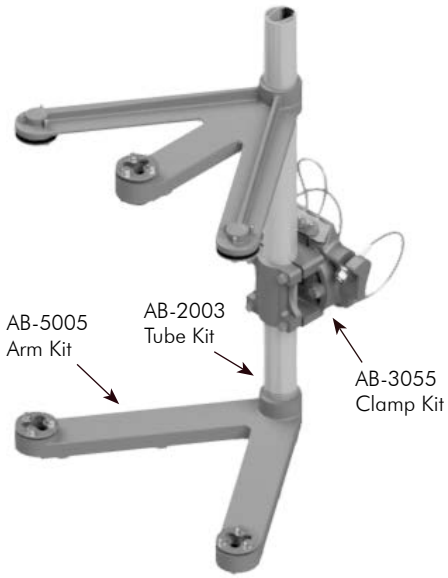

Astro-Brac Galaxy Assy, 5-Sec Cluster Cable Mount

AG-0138 - [Cable Length] - [Cable] - [Coating]

Cable Length: See Note
Cable: Blank=Galv, SS=Stainless
Coating: PNC=Process No Color, P_ _=Paint

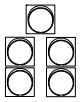

Note:
Cable Length: 62", 84", 96", 110", 120", 132", 144", 220", or 280".

Astro-Brac Stellar Assy, 5-Sec Cluster Cable Mount

AS-0138 - [Cable Length] - [Cable] - [Coating]

Cable Length: See Note
Cable: Blank=Galv, SS=Stainless
Coating: PNC=Process No Color, P_ _=Paint

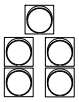

Note:
Cable Length: 62", 84", 96", 110", 120", 132", 144", 220", or 280".

Note: 1. All assemblies are supplied standard with stainless steel slotted washers and fasteners.
2. See Reference Section for clamp kit pole diameters.
3. See Reference Section for available paint colors.

Cluster Assemblies

Designed to accommodate all traffic signals, with the exception of optically programmed (see pages T1-18 through T1-21).
The Cluster Stellar Astro-Brac features all-axis adjustability and is designed to facilitate the mounting of 5-section signal heads to any shape mast arm or pole.

Astro-Brac Stellar Assy, 5-Sec Cluster Band Mount

AS-0109 - [Band Length] - [Clamp Screw] - [Coating]

Band Length: See Note
Clamp Screw: Blank=Galv, SS=Stainless
Coating: PNC=Process No Color, P_ _=Paint

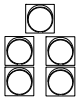

Note:
Band Length: 29", 36", 42", 48", 56", 72", 84", 96", or 114".

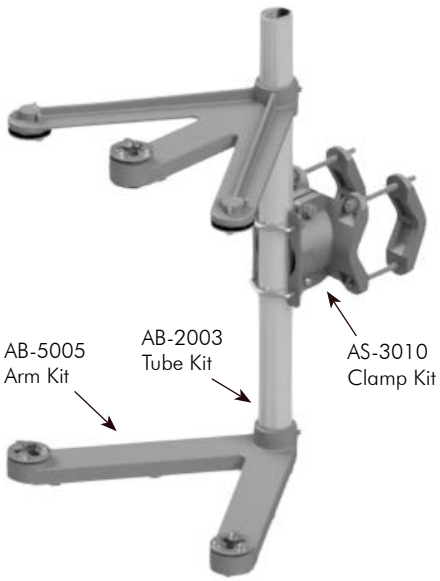

Astro-Brac Stellar Assy, 5-Sec Cluster Tenon Mount

AS-0190 - [Coating]

Coating: PNC=Process No Color, P_ _=Paint

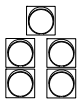

Note:
Fits 1.9" to 4.5" diameter.

Note: 1. All assemblies are supplied standard with stainless steel slotted washers and fasteners.
2. See Reference Section for clamp kit pole diameters.
3. See Reference Section for available paint colors.

Cluster Assemblies

The Atlas articulating series of Astro-Brac can conceal one 3/4" diameter or two 5/8" diameter conduits. The cluster assemblies are designed to mount 5-section heads to any shape of mast arm or pole.

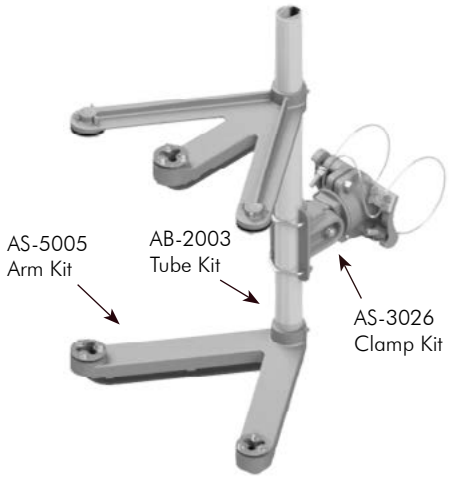

Astro-Brac Atlas Assy, 5-Sec Cluster Articulating Cable Mount

AS-0162 - [Cable Length] - [Cable] - [Coating]

Cable Length	Cable	Coating
See Note	Blank=Galv SS=Stainless	PNC=Process No Color P_ _=Paint

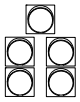

Note:
Cable Length: 62", 84", 96", 110", 120", 132", 144", 220", or 280".

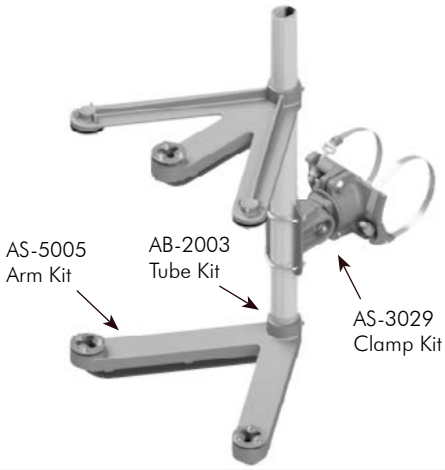

Astro-Brac Atlas Assy, 5-Sec Cluster Articulating Band Mount

AS-0675 - [Band Length] - [Clamp Screw] - [Coating]

Band Length	Clamp Screw	Coating
See Note	Blank=Galv SS=Stainless	PNC=Process No Color P_ _=Paint

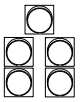

Note:
Band Length: 29", 36", 42", 48", 56", 72", 84", 96", or 114".

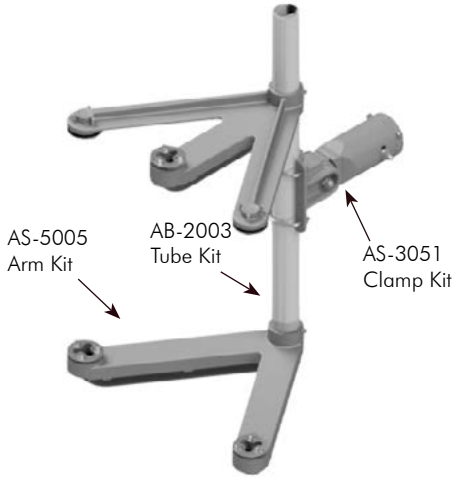

Astro-Brac Atlas Assy, 5-Sec Cluster Articulating Tenon Mount

AS-0187 - [Cable Length] - [Coating]

Cable Length	Coating
62=62" Cable 84=84" Cable 96=96" Cable	PNC=Process No Color P_ _=Paint

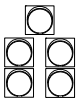

Note:
Fits 1.9" diameter.

Note: 1. All assemblies are supplied standard with stainless steel slotted washers and fasteners.
2. See Reference Section for clamp kit pole diameters.
3. See Reference Section for available paint colors.

Cluster Assemblies

Designed to accommodate all traffic signals, with the exception of the optically programmed (see T1-18 through T1-21). The cluster assembly with cast uppers is designed to mount 3, 4 or 5-section clusters in various configurations to any size of mast arm or pole.

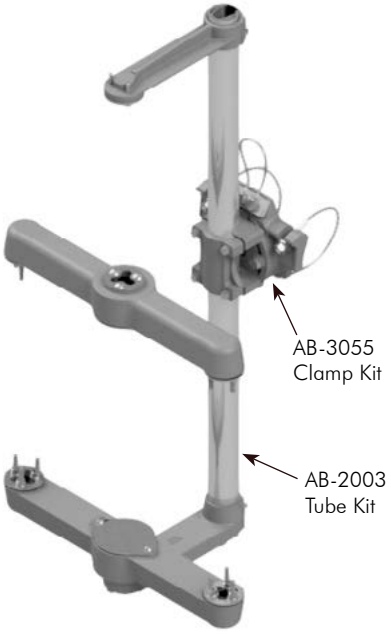

Astro-Brac Galaxy Assy, Cluster w/ 17" CTC Cast Uppers Cable Mount

AG-0168 - [Cable Length] - [Cable] - [Coating]

Cable Length: See Note
Cable: Blank=Galv, SS=Stainless
Coating: PNC=Process No Color, P_ _=Paint

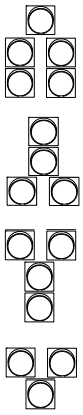

Note:
Cable Length: 62", 84", 96", 110", 120", 132", 144", 220", or 280".

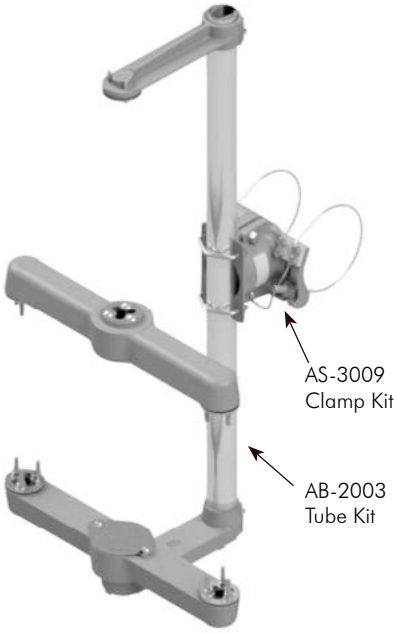

Astro-Brac Stellar Assy, Cluster w/ 17" CTC Cast Uppers Cable Mount

AS-0168 - [Cable Length] - [Cable] - [Coating]

Cable Length: See Note
Cable: Blank=Galv, SS=Stainless
Coating: PNC=Process No Color, P_ _=Paint

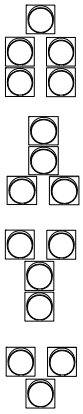

Note:
Cable Length: 62", 84", 96", 110", 120", 132", 144", 220", or 280".

Note: 1. All assemblies are supplied standard with stainless steel slotted washers and fasteners.
2. See Reference Section for clamp kit pole diameters.
3. See Reference Section for available paint colors.

Cluster Assemblies

Designed to accommodate all traffic signals, with the exception of the optically programmed (see T1-18 through T1-21). The cluster assembly with cast uppers is designed to mount 3, 4 or 5-section clusters in various configurations to any size of mast arm or pole.

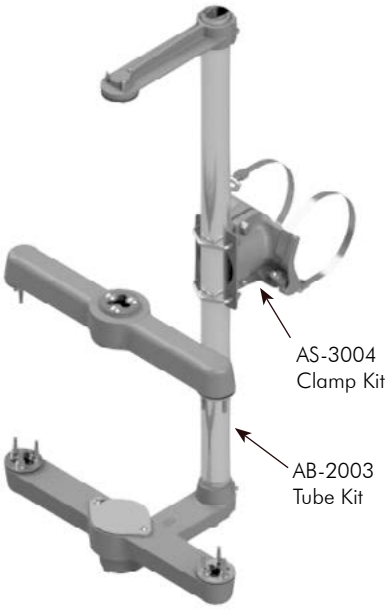

Astro-Brac Stellar Assy, Cluster w/ 17" CTC Cast Uppers Band Mount

AS-0167 - [Band Length] - [Clamp Screw] - [Coating]

Band Length: See Note
Clamp Screw: Blank=Galv, SS=Stainless
Coating: PNC=Process No Color, P_ _=Paint

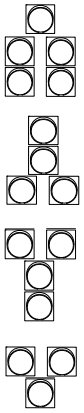

Note:
Band Length: 29", 36", 42", 48", 56", 72", 84", 96", or 114".
Stainless steel upgrade available: includes stainless clamp screw

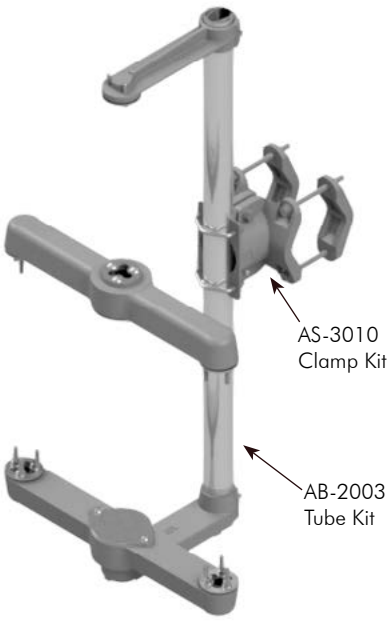

Astro-Brac Stellar Assy, Cluster w/ 17" CTC Cast Uppers Tenon Mount

AS-0679 - [Coating]

Coating: PNC=Process No Color, P_ _=Paint

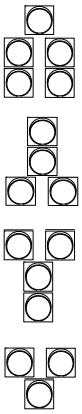

Note:
Fits 1.9" to 4.5" diameter.

Note: 1. All assemblies are supplied standard with stainless steel slotted washers and fasteners.
2. See Reference Section for clamp kit pole diameters.
3. See Reference Section for available paint colors.

1-Way Pedestrian Assemblies

With the extended arms this bracket assembly is designed to accommodate the pedestrian signal. The Stellar Astro-Brac features all-axis adjustability and is designed to facilitate the mounting of a ped signal to any shape pole.

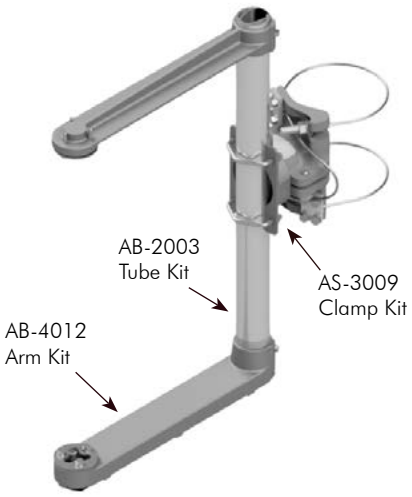

Astro-Brac Stellar Assy, 1-Way for ICC Ped Head Cable Mount

		Cable Length		Cable		Coating
AS-0157	-	☐	-	☐	-	☐
		See Note		Blank=Galv SS=Stainless		PNC=Process No Color P_ _=Paint

Note:
Cable Length: 62″, 84″, 96″, 110″, 120″, 132″, 144″, 220″, or 280″.

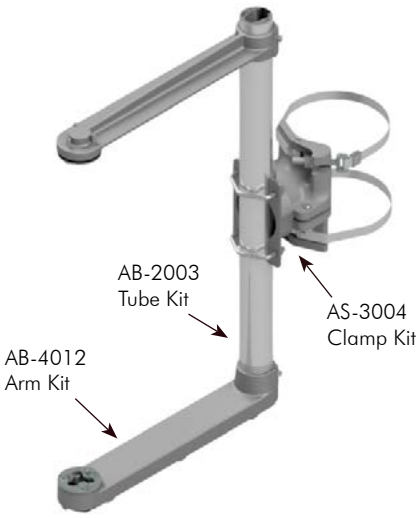

Astro-Brac Stellar Assy, 1-Way for ICC Ped Head Band Mount

		Band Length		Clamp Screw		Coating
AS-0133	-	☐	-	☐	-	☐
		See Note		Blank=Galv SS=Stainless		PNC=Process No Color P_ _=Paint

Note:
Band Length: 29″, 36″, 42″, 48″, 56″, 72″, 84″, 96″, or 114″.

Note: 1. All assemblies are supplied standard with stainless steel slotted washers and fasteners.
2. See Reference Section for clamp kit pole diameters.
3. See Reference Section for available paint colors.

2-Way Pedestrian Assemblies

With the extended arms this bracket assembly is designed to accommodate the pedestrian signal. The Stellar Astro-Brac features all-axis adjustability and is designed to facilitate the mounting of two ped signals to any shape pole.

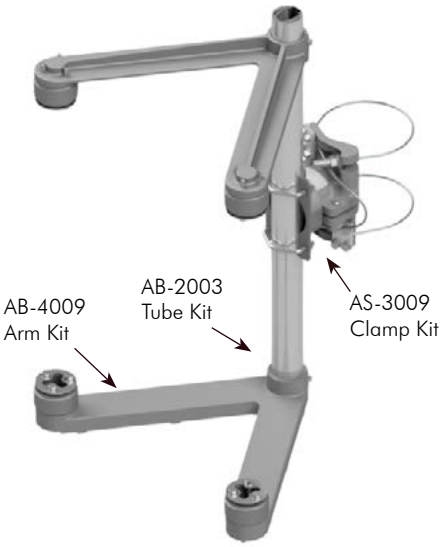

Astro-Brac Stellar Assy, 2-Way for ICC Ped Heads Cable Mount

AS-0158 - [ ] - [ ] - [ ]

Cable Length	Cable	Coating
See Note	Blank=Galv SS=Stainless	PNC=Process No Color P_ _=Paint

Note:
Cable Length: 62", 84", 96", 110", 120", 132", 144", 220", or 280".

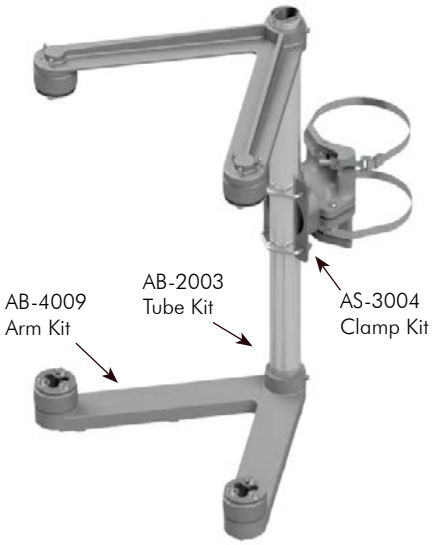

Astro-Brac Stellar Assy, 2-Way for ICC Ped Heads Band Mount

AS-0131 - [ ] - [ ] - [ ]

Band Length	Clamp Screw	Coating
See Note	Blank=Galv SS=Stainless	PNC=Process No Color P_ _=Paint

Note:
Band Length: 29", 36", 42", 48", 56", 72", 84", 96", or 114".

Note: 1. All assemblies are supplied standard with stainless steel slotted washers and fasteners.
2. See Reference Section for clamp kit pole diameters.
3. See Reference Section for available paint colors.

1-Way OPS Assemblies

Designed to accommodate optically programmed signal heads. The Astro-Brac features all-axis adjustability and is designed to facilitate the mounting of any size OPS signal to any shape of mast arm or pole.

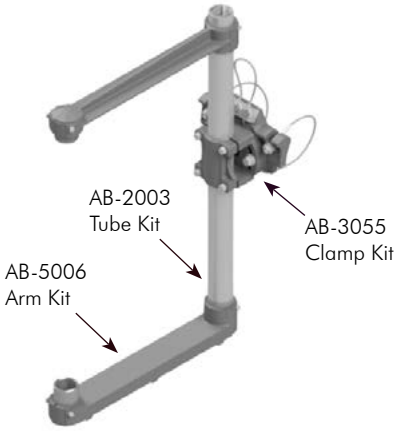

Astro-Brac Galaxy Assy, 1-Way for OPS Signals Cable Mount, 1-1/2" NPS

	Signal Section		Cable Length		Cable		Coating
AG-0151	- [ ]	-	[ ]	-	[ ]	-	[ ]
	3=3 Sec 4=4 Sec 5=5 Sec		See Note		Blank=Galv SS=Stainless		PNC=Process No Color P_ _=Paint

Note:
Cable Length: 62", 84", 96", 110", 120", 132", 144", 220", or 280".

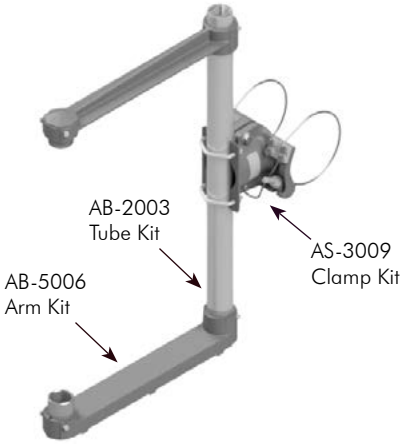

Astro-Brac Stellar Assy, 1-Way for OPS Signals Cable Mount, 1-1/2" NPS

	Signal Section		Cable Length		Cable		Coating
AS-0151	- [ ]	-	[ ]	-	[ ]	-	[ ]
	3=3 Sec 4=4 Sec 5=5 Sec		See Note		Blank=Galv SS=Stainless		PNC=Process No Color P_ _=Paint

Note:
Cable Length: 62", 84", 96", 110", 120", 132", 144", 220", or 280".

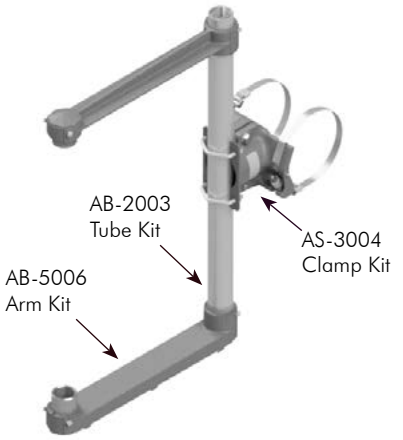

Astro-Brac Stellar Assy, 1-Way for OPS Signals Band Mount, 1-1/2" NPS

	Signal Section		Band Length		Clamp Screw		Coating
AS-0152	- [ ]	-	[ ]	-	[ ]	-	[ ]
	3=3 Sec 4=4 Sec 5=5 Sec		See Note		Blank=Galv SS=Stainless		PNC=Process No Color P_ _=Paint

Note:
Band Length: 29", 36", 42", 48", 56", 72", 84", 96", or 114".

Note: 1. All assemblies are supplied standard with stainless steel slotted washer and fasteners.
2. See Reference Section for clamp kit pole diameters.
3. See Reference Section for available paint colors.

1-Way OPS Assemblies

Designed to accommodate optically programmed signal heads. The Astro-Brac features all-axis adjustability and is designed to facilitate the mounting of any size OPS signal to any shape of mast arm or pole.

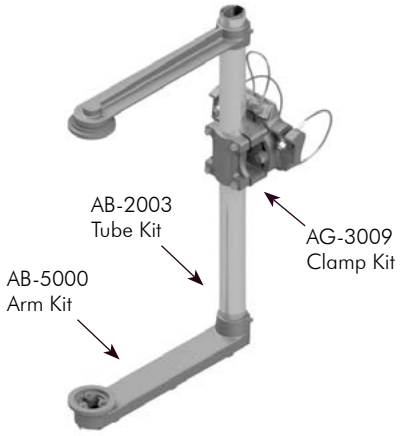

Astro-Brac Galaxy Assy, 1-Way for OPS Signals Cable Mount, Tri-Bolt

	Signal Section		Cable Length		Cable		Coating
AG-0633 -	☐	-	☐	-	☐	-	☐
	3=3 Sec 4=4 Sec 5=5 Sec		See Note		Blank=Galv SS=Stainless		PNC=Process No Color P_ _=Paint

Note:
Cable Length: 62", 84", 96", 110", 120", 132", 144", 220", or 280".

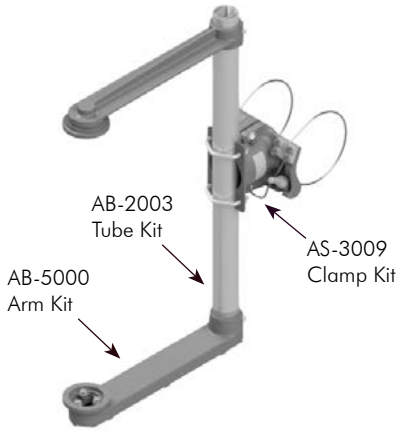

Astro-Brac Stellar Assy, 1-Way for OPS Signals Cable Mount, Tri-Bolt

	Signal Section		Cable Length		Cable		Coating
AS-0633 -	☐	-	☐	-	☐	-	☐
	3=3 Sec 4=4 Sec 5=5 Sec		See Note		Blank=Galv SS=Stainless		PNC=Process No Color P_ _=Paint

Note:
Cable Length: 62", 84", 96", 110", 120", 132", 144", 220", or 280".

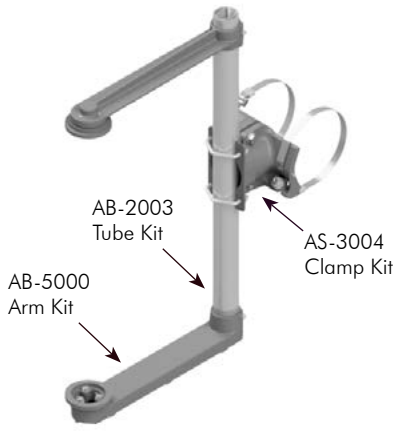

Astro-Brac Stellar Assy, 1-Way for OPS Signals Band Mount, Tri-Bolt

	Signal Section		Band Length		Clamp Screw		Coating
AS-0103 -	☐	-	☐	-	☐	-	☐
	3=3 Sec 4=4 Sec 5=5 Sec		See Note		Blank=Galv SS=Stainless		PNC=Process No Color P_ _=Paint

Note:
Band Length: 29", 36", 42", 48", 56", 72", 84", 96", or 114".

Note: 1. All assemblies are supplied standard with stainless steel slotted washer and fasteners.
2. See Reference Section for clamp kit pole diameters.
3. See Reference Section for available paint colors.

1-Way OPS Assemblies

Designed to accommodate optically programmed signal heads. The Astro-Brac features all-axis adjustability and is designed to facilitate the mounting of any size OPS signal to any shape of mast arm or pole.

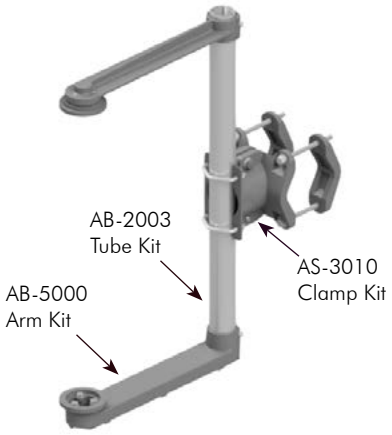

Astro-Brac Stellar Assy, 1-Way for OPS Signals Tenon Mount, Tri-Bolt

	Signal Section		Coating
AS-0143	- ☐	-	☐
	3=3 Sec 4=4 Sec 5=5 Sec		PNC=Process No Color P__=Paint

Note:
Fits 1.9″ to 4.5″ diameter.

Note: 1. All assemblies are supplied standard with stainless steel washers and fasteners.
2. See Reference Section for clamp kit pole diameters.
3. See Reference Section for available paint colors.

Variable OPS Assemblies

Designed to accommodate optically programmed signal heads. The 2-Way Variable OPS bracket features all-axis adjustability and is designed to facilitate the mounting of unbalanced signal combinations to any shape mast arm or pole.

Astro-Brac Stellar Assy, 2-Way Variable for OPS Signals Band Mount

	Signal Section		Band Length		Clamp Screw		Coating
AS-0192	- [ ]	-	[ ]	-	[ ]	-	[ ]
	2=2 Sec 3=3 Sec 4=4 Sec 5=5 Sec		See Note		Blank=Galv SS=Stainless		PNC=Process No Color P_ _=Paint

Note:
Band Length: 29", 36", 42", 48", 56", 72", 84", 96", or 114".

Note: 1. All assemblies are supplied standard with stainless steel slotted washer and fasteners.
2. See Reference Section for clamp kit pole diameters.
3. See Reference Section for available paint colors.

Cluster OPS Assemblies

Designed to accommodate optically programmed signal heads. The Cluster OPS bracket features all-axis adjustability and is designed to facilitate the mounting of any size OPS signal to any shape of mast arm or pole.

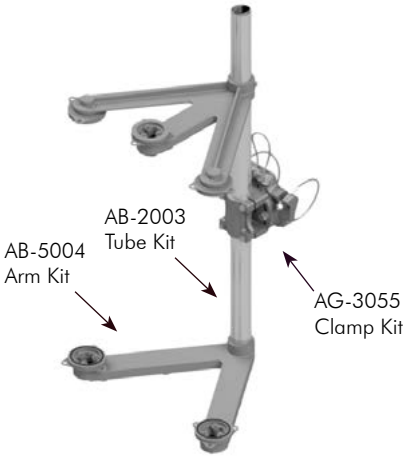

Astro-Brac Galaxy Assy, 5-Sec Cluster for OPS Signals Cable Mount, Tri-Bolt

	Cable Length		Cable		Coating
AG-0199 -	[ ]	-	[ ]	-	[ ]
	See Note		Blank=Galv SS=Stainless		PNC=Process No Color P_ _=Paint

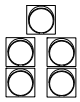

Note:
Cable Length: 62", 84", 96", 110", 120", 132", 144", 220", or 280".

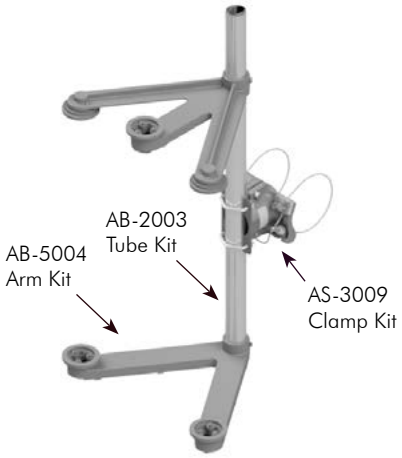

Astro-Brac Stellar Assy, 5-Sec Cluster for OPS Signals Cable Mount

	Cable Length		Cable		Coating
AS-0199 -	[ ]	-	[ ]	-	[ ]
	See Note		Blank=Galv SS=Stainless		PNC=Process No Color P_ _=Paint

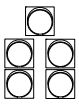

Note:
Cable Length: 62", 84", 96", 110", 120", 132", 144", 220", or 280".

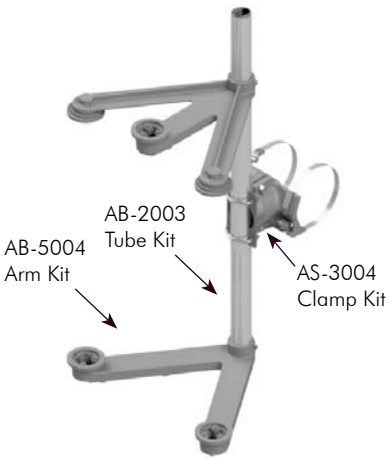

Astro-Brac Stellar Assy, 5-Sec Cluster for OPS Signals Band Mount

	Band Length		Clamp Screw		Coating
AS-0191 -	[ ]	-	[ ]	-	[ ]
	See Note		Blank=Galv SS=Stainless		PNC=Process No Color P_ _=Paint

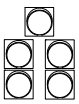

Note:
Band Length: 29", 36", 42", 48", 56", 72", 84", 96", or 114".

Note: 1. All assemblies are supplied standard with stainless steel slotted washer and fasteners.
2. See Reference Section for clamp kit pole diameters.
3. See Reference Section for available paint colors.

Terminal Compartment Assemblies

Pelco's in-line Astro-Brac terminal compartment assemblies satify the need of a terminal compartment without sacrificing all-axis adjustability. Available in cable or band mount.

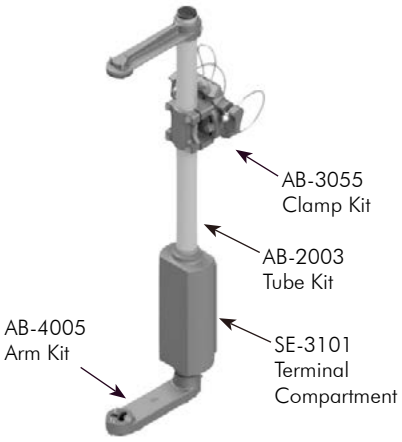

Astro-Brac Galaxy Assy, 1-Way Terminal Compartment Cable Mount

	Signal Section		Cable Length		Cable		Coating
AG-0620 -	[ ]	-	[ ]	-	[ ]	-	[ ]
	3=3 Sec 4=4 Sec 5=5 Sec		See Note		Blank=Galv SS=Stainless		PNC=Process No Color P_ _=Paint

Note:
Cable Length: 62", 84", 96", 110", 120", 132", 144", 220", or 280".

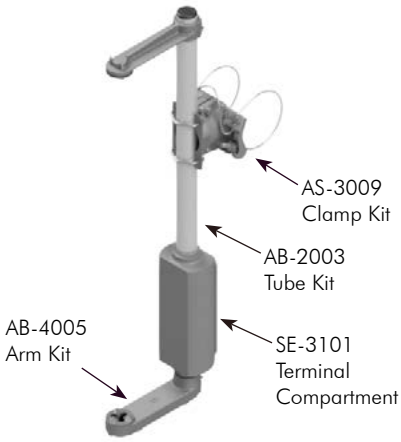

Astro-Brac Stellar Assy, 1-Way Terminal Compartment Cable Mount

	Signal Section		Cable Length		Cable		Coating
AS-0620 -	[ ]	-	[ ]	-	[ ]	-	[ ]
	3=3 Sec 4=4 Sec 5=5 Sec		See Note		Blank=Galv SS=Stainless		PNC=Process No Color P_ _=Paint

Note:
Cable Length: 62", 84", 96", 110", 120", 132", 144", 220", or 280".

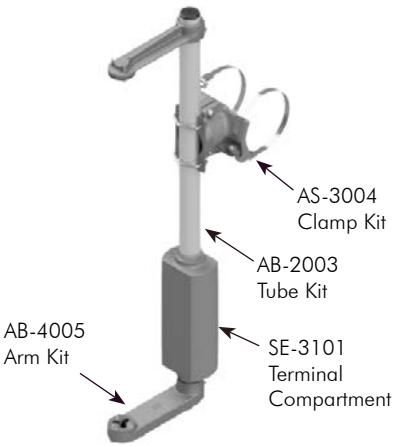

Astro-Brac Stellar Assy, 1-Way Terminal Compartment Band Mount

	Signal Section		Band Length		Clamp Screw		Coating
AS-0112 -	[ ]	-	[ ]	-	[ ]	-	[ ]
	3=3 Sec 4=4 Sec 5=5 Sec		See Note		Blank=Galv SS=Stainless		PNC=Process No Color P_ _=Paint

Note:
Band Length: 29", 36", 42", 48", 56", 72", 84", 96", or 114".

Note: 1. All assemblies are supplied standard with stainless steel slotted washer and fasteners.
2. See Reference Section for clamp kit pole diameters.
3. See Reference Section for available paint colors.

Terminal Compartment Assemblies

Pelco's in-line Astro-Brac terminal compartment assemblies satify the need of a terminal compartment without sacrificing all-axis adjustability. Available in cable or band mount.

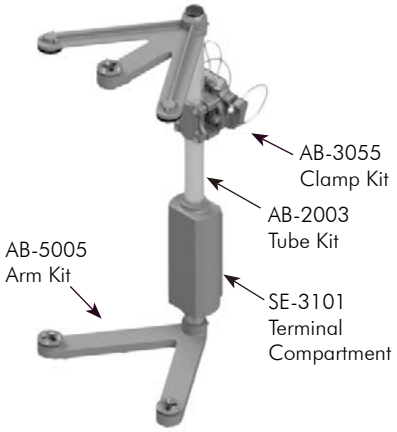

Astro-Brac Galaxy Assy, 5-Sec Cluster Terminal Compartment Cable Mount

	Cable Length		Cable		Coating
AG-0621 -	[ ]	-	[ ]	-	[ ]
	See Note		Blank=Galv SS=Stainless		PNC=Process No Color P_ _=Paint

Note:
Cable Length: 62", 84", 96", 110", 120", 132", 144", 220", or 280".

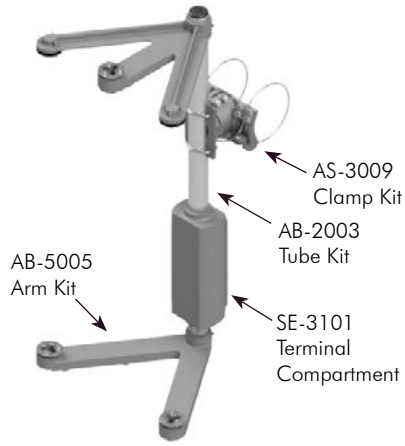

Astro-Brac Stellar Assy, 5-Sec Cluster Terminal Compartment Cable Mount

	Cable Length		Cable		Coating
AS-0621 -	[ ]	-	[ ]	-	[ ]
	See Note		Blank=Galv SS=Stainless		PNC=Process No Color P_ _=Paint

Note:
Cable Length: 62", 84", 96", 110", 120", 132", 144", 220", or 280".

Note: 1. All assemblies are supplied standard with stainless steel slotted washer and fasteners.
2. See Reference Section for clamp kit pole diameters.
3. See Reference Section for available paint colors.

Galaxy Series Clamp Kits

The Galaxy is designed using a single cable plate which allows for easy installation, as well as the multi-directional adjustable tube saddle for strength. These high tensile aluminum alloy clamp kits provide strength with maximum adjustability and complete clamping versatility. Comes complete with all necessary attaching hardware.

AB-0280/AB-0320
Cable Kit

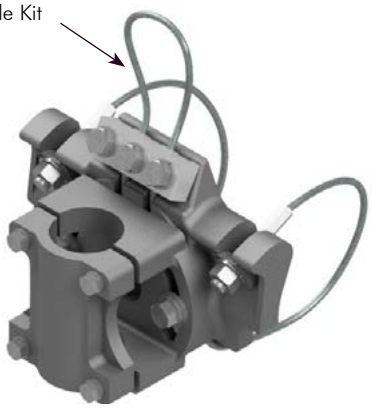

Astro-Brac, Galaxy Series Clamp Kit, Cable Mount

	Cable Length		Cable		Coating
AB-3055 -	☐	-	☐	-	☐
	See Note		Blank=Galv SS=Stainless		PNC=Process No Color P_ _=Paint

Note:
Cable Length: 62", 84", 96", 110", 120", 132", 144", 220", or 280".

AB-0280/AB-0320
Cable Kit

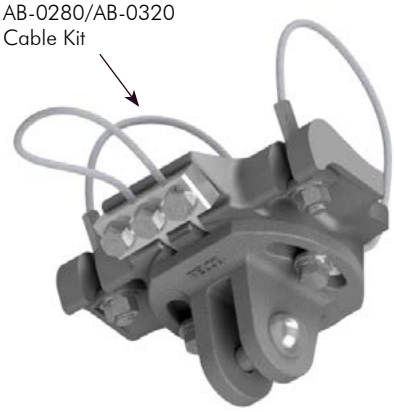

Astro-Brac, Galaxy Series Clamp Kit, Cable Mount, 3/4" Clevis, Free-Swinging

	Cable Length		Stainless Upgrade		Bushing		Coating
AG-3014 -	☐	-	☐	-	☐	-	☐
	See Note		Blank=Galv SS=Stainless		SB=Stainless Bushing		PNC=Process No Color P_ _=Paint

Note:
Cable Length: 62", 84", 96", 110", 120", 132", 144", 220", or 280".
Stainless upgrade to include stainless cable and pins.

Note: 1. All assemblies are supplied standard with stainless steel fasteners.
2. See Reference Section for clamp kit pole diameters.
3. See Reference Section for available paint colors.

Stellar Series Clamp Kits

These high tensile aluminum alloy clamp kits provide strength with maximum adjustability and complete clamping versatility. The 2-piece clamp features a strong clamping method with quick and easy installation. Supplied with all necessary attaching hardware.

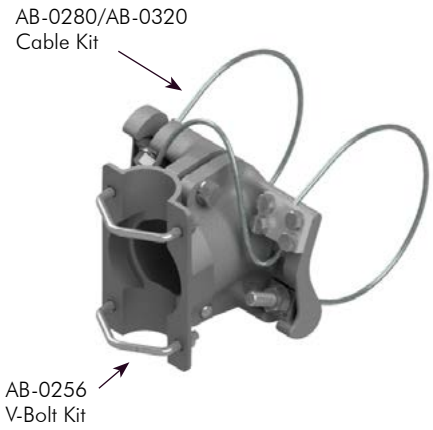

Astro-Brac, Stellar Series Clamp Kit, Cable Mount

	Cable Length		Cable		Coating
AS-3009	- [ ]	-	[ ]	-	[ ]
	See Note		Blank=Galv SS=Stainless		PNC=Process No Color P_ _=Paint

Note:
Cable Length: 62", 84", 96", 110", 120", 132", 144", 220", or 280".

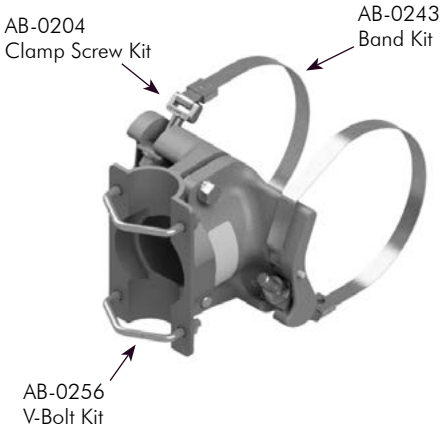

Astro-Brac, Stellar Series Clamp Kit, Band Mount

	Cable Length		Clamp Screw		Coating
AS-3004	- [ ]	-	[ ]	-	[ ]
	See Note		Blank=Galv SS=Stainless		PNC=Process No Color P_ _=Paint

Note:
Band Length: 29", 36", 42", 48", 56", 72", 84", 96", or 114".

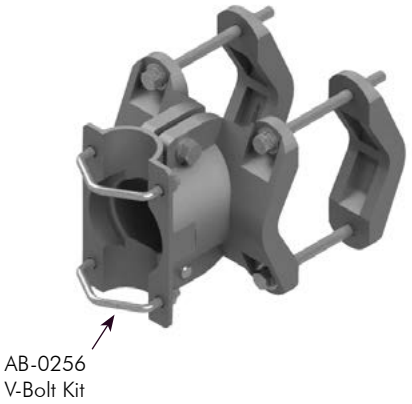

Astro-Brac, Stellar Series Clamp Kit, Tenon Mount

	Coating
AS-3010 -	[ ]
	PNC=Process No Color P_ _=Paint

Note:
Fits 1.9" to 4.5" diameter.

Note: 1. All assemblies are supplied standard with stainless steel fasteners.
2. See Reference Section for clamp kit pole diameters.
3. See Reference Section for available paint colors.

Atlas Series Clamp Kits

These aluminum serrated articulating clamp kits were specifically designed to accommodate larger conduit. The 3 axis adjustability provides complete clamping versatility. They feature stainless steel bands or high strength galvanized or stainless steel aircraft cable. Supplied complete with all necessary attaching hardware.

Astro-Brac, Atlas Series Clamp Kit, Articulated Serrated Cable Mount

		Cable Length		Cable		Coating
AS-3026	-	☐	-	☐	-	☐
		See Note		Blank=Galv SS=Stainless		PNC=Process No Color P_ _=Paint

Note:
Cable Length: 62", 84", 96", 110", 120", 132", 144", 220", or 280".

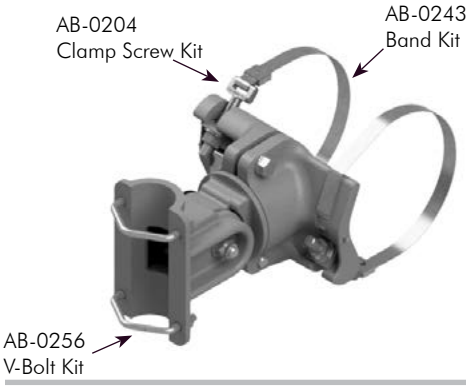

Astro-Brac, Atlas Series Clamp Kit, Articulated Serrated Band Mount

		Cable Length		Clamp Screw		Coating
AS-3029	-	☐	-	☐	-	☐
		See Note		Blank=Galv SS=Stainless		PNC=Process No Color P_ _=Paint

Note:
Band Length: 29", 36", 42", 48", 56", 72", 84", 96", or 114".

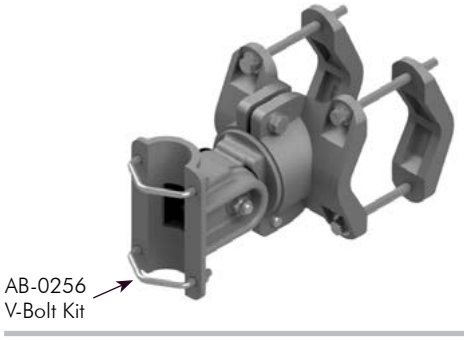

Astro-Brac, Atlas Series Clamp Kit, Articulated Serrated Tenon Mount

		Coating	
AS-3030	-	☐	
		PNC=Process No Color P_ _=Paint	

Note:
Fits 1.9" to 4.5" diameter.

Astro-Brac, Atlas Series Clamp Kit, Articulated Serrated Tenon Mount

		Coating	
AB-3051	-	☐	
		PNC=Process No Color P_ _=Paint	

Note:
Fits 1.9" to 4.5" diameter.

Note: 1. All assemblies are supplied standard with stainless steel fasteners.
2. See Reference Section for clamp kit pole diameters.
3. See Reference Section for available paint colors.

Triton Series Clamp Kits

These high tensile aluminum alloy clamp kits provide strength with maximum adjustability and complete clamping versatility. The Triton clamp kits utilize three bands or cables and are designed to be used with a 2-3/8" diameter tube. Comes complete with all necessary attaching hardware.

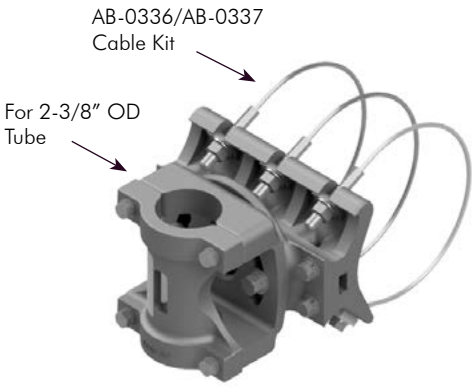

Astro-Brac, Triton Series Clamp Kit for 2" Tube Cable Mount

	Cable Length		Cable		Coating
AB-3040 -	[ ]	-	[ ]	-	[ ]
	See Note		Blank=Galv SS=Stainless		PNC=Process No Color P_ _=Paint

Note:
Cable Length: 45", 62", or 84".

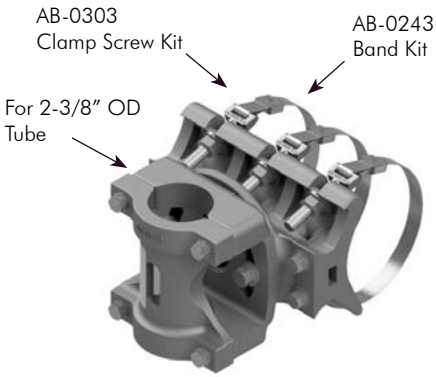

Astro-Brac, Triton Series Clamp Kit for 2" Tube Band Mount

	Cable Length		Clamp Screw		Coating
AB-3039 -	[ ]	-	[ ]	-	[ ]
	See Note		Blank=Galv SS=Stainless		PNC=Process No Color P_ _=Paint

Note:
Band Length: 29", 36", 42", 48", 56", 72", or 84".

Note: 1. All assemblies are supplied standard with stainless steel fasteners.
2. See Reference Section for clamp kit pole diameters.
3. See Reference Section for available paint colors.

Cable Mount Clamp Kits

These high tensile aluminum alloy clamp kits provide strength with maximum adjustability and complete clamping versatility.
They feature high strength galvanized or stainless steel aircraft cable.
Supplied complete with all necessary attaching hardware.

AB-0280/AB-0320
Cable Kit

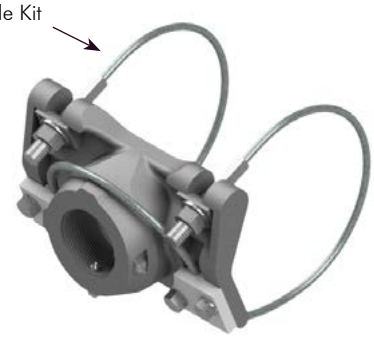

Astro-Brac Clamp Kit, 1-1/2" NPS Cable Mount

	Cable Length		Cable		Coating
AB-3034	- [ ]	-	[ ]	-	[ ]
	See Note		Blank=Galv SS=Stainless		PNC=Process No Color P_ _=Paint

Note:
Cable Length: 62", 84", 96", 110", 120", 132", 144", 220", or 280".

AB-0280/AB-0320
Cable Kit

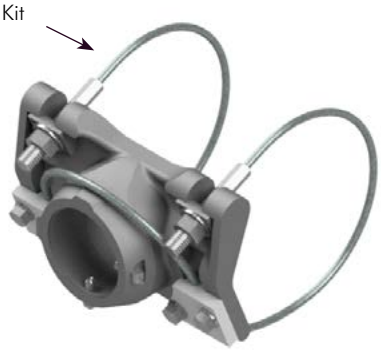

Astro-Brac Clamp Kit, 2" NPS Cable Mount

	Cable Length		Cable		Coating
AB-3035	- [ ]	-	[ ]	-	[ ]
	See Note		Blank=Galv SS=Stainless		PNC=Process No Color P_ _=Paint

Note:
Cable Length: 62", 84", 96", 110", 120", 132", 144", or 220".

AB-0280/AB-0320
Cable Kit

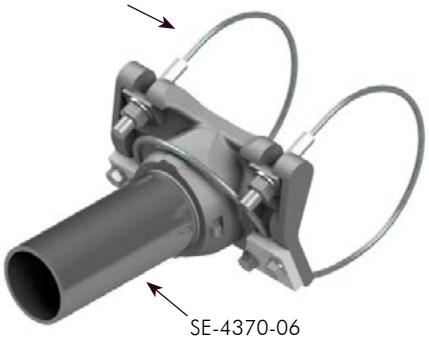

SE-4370-06
Support Tube

Astro-Brac Clamp Kit, 2" NPS x 6" Plumbizer Tube Cable Mount

	Cable Length		Cable		Coating
AB-3053	- [ ]	-	[ ]	-	[ ]
	See Note		Blank=Galv SS=Stainless		PNC=Process No Color P_ _=Paint

Note:
Cable Length: 62", 84", 96", 110", 120", 132", 144", or 220".

Note: 1. All assemblies are supplied standard with stainless steel fasteners.
2. See Reference Section for clamp kit pole diameters.
3. See Reference Section for available paint colors.

Band Mount Clamp Kits

These high tensile aluminum alloy clamp kits provide strength with maximum adjustability and complete clamping versatility. They feature forged galvanized clamp screws which allow easy signal mounting on any size signal pole. Supplied complete with all necessary attaching hardware.

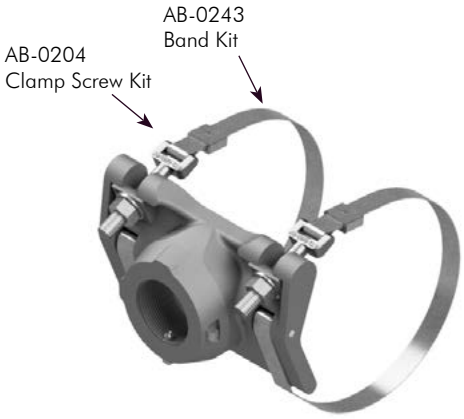

Astro-Brac Clamp Kit, 1-1/2" NPS Band Mount

	Cable Length		Clamp Screw		Coating
AB-3006 -	[ ]	-	[ ]	-	[ ]
	See Note		Blank=Galv SS=Stainless		PNC=Process No Color P_ _=Paint

Note:
Band Length: 29", 36", 42", 48", 56", 72", or 84".

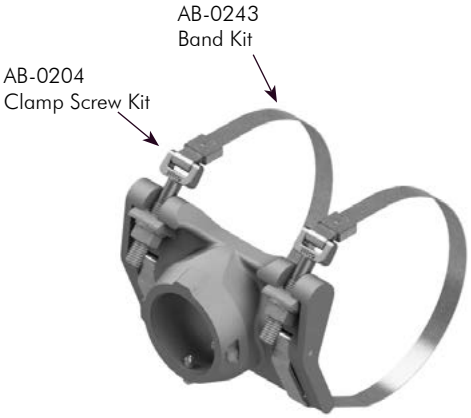

Astro-Brac Clamp Kit, 2" NPS Band Mount

	Cable Length		Clamp Screw		Coating
AB-3007 -	[ ]	-	[ ]	-	[ ]
	See Note		Blank=Galv SS=Stainless		PNC=Process No Color P_ _=Paint

Note:
Band Length: 29", 36", 42", 48", 56", 72", or 84".

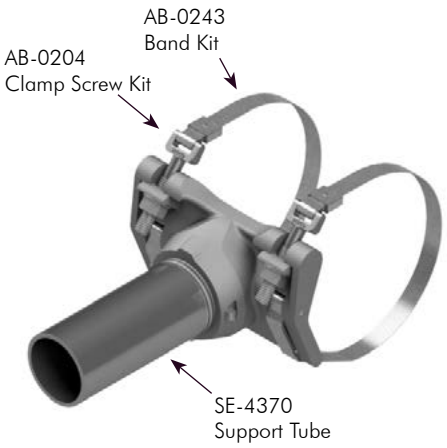

Astro-Brac Clamp Kit, w/ 2" NPS Plumbizer Tube Band Mount

	Cable Length		Clamp Screw		Coating
AB-3008 -	[ ]	-	[ ]	-	[ ]
	See Note		Blank=Galv SS=Stainless		PNC=Process No Color P_ _=Paint

Note:
Band Length: 29", 36", 42", 48", 56", 72", or 84".

Note: 1. All assemblies are supplied standard with stainless steel fasteners.
2. See Reference Section for clamp kit pole diameters.
3. See Reference Section for available paint colors.

ISO 9001 www.intlcert.com

Mini-Brac Clamp Kits

This unique mount is a smaller version of the Astro-Brac and gives the same kind of universal application. Ideal for side-of-pole or mast arm mountings for vehicle or pedestrian signals and emergency traffic signal sensors.

AB-0336/AB-0337
Cable Kit

Astro Mini-Brac Clamp Kit, 1-1/2" NPS Cable Mount

Side-of-Pole Mounting
Vehicular or Pedestrian Signals

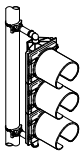

	Cable Length		Cable		Coating
AB-0160 -		-		-	
	See Note		Blank=Galv SS=Stainless		PNC=Process No Color P_ _=Paint

Note:
Cable Length: 45", 62", or 84".

AB-0303
Clamp Screw Kit

Astro Mini-Brac Clamp Kit, 1-1/2" NPS Band Mount,

Side-of-Pole Mounting
Vehicular or Pedestrian Signals

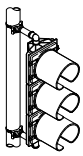

	Cable Length		Clamp Screw		Coating
AB-0121 -		-		-	
	See Note		Blank=Galv SS=Stainless		PNC=Process No Color P_ _=Paint

Note:
Band Length: 29", 36", 42", 48", 56", 72", or 84".

AB-0336/AB-0337
Cable Kit

Astro Mini-Brac Clamp Kit, 3/4"-14 NPT Cable Mount

Mast Arm Mounting
Emergency Traffic Signal Sensor

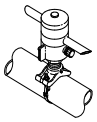

	Cable Length		Cable		Coating
AB-0163 -		-		-	
	See Note		Blank=Galv SS=Stainless		PNC=Process No Color P_ _=Paint

Note:
Cable Length: 45", 62", or 84".

AB-0303
Clamp Screw Kit

Astro Mini-Brac Clamp Kit, 3/4"-14 NPT Band Mount

Mast Arm Mounting
Emergency Traffic Signal Sensor

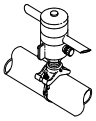

	Cable Length		Clamp Screw		Coating
AB-0155 -		-		-	
	See Note		Blank=Galv SS=Stainless		PNC=Process No Color P_ _=Paint

Note:
Band Length: 29", 36", 42", 48", 56", 72", or 84".

Note: 1. All assemblies are supplied standard with stainless steel fasteners.
2. See Reference Section for clamp kit pole diameters.
3. See Reference Section for available paint colors.

ISO 9001
www.intlcert.com

This page is intentionally left blank.

1-Way Astro-Brac Arm Kits

All Pelco arm kits are durable aluminum alloy castings. Various styles are available to fit any manufacturers signal. They allow positive positioning of the signal head without misalignment. Supplied complete with stainless steel hardware and wire covers.

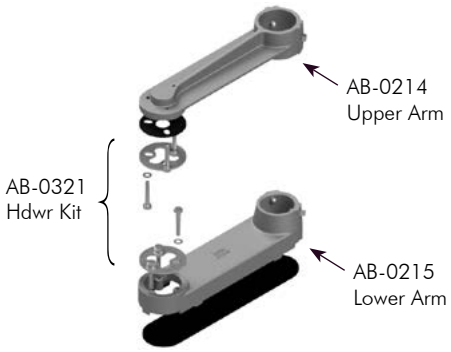

1-Way Kit, 8-1/2" CTC, Alum

AB-4005 - ☐

Coating

PNC=Process No Color
P_ _=Paint

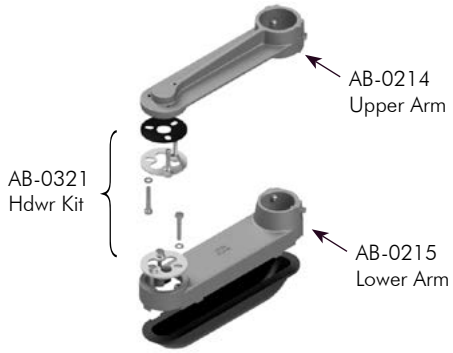

1-Way Arm Kit, 8-1/2" CTC, Alum Large Capacity,

AS-4005 - ☐

Coating

PNC=Process No Color
P_ _=Paint

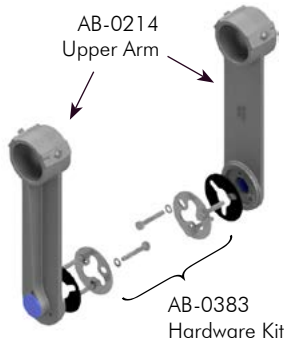

1-Way Arm Kit, 8-1/2" CTC, Alum Tapped for 3/4" CGB

AB-4013 - ☐

Coating

PNC=Process No Color
P_ _=Paint

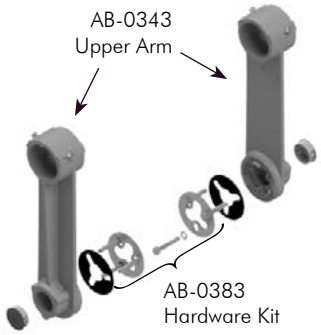

1-Way Arm Kit, 8-1/2" CTC, Alum Tapped for 1" CGB

AB-4010 - ☐

Coating

PNC=Process No Color
P_ _=Paint

Note: 1. All assemblies are supplied standard with stainless steel washer and fasteners.
2. See Reference Section for available paint colors.

ISO 9001 www.intlcert.com

1-Way Astro-Brac Arm Kits

All Pelco arm kits are durable aluminum alloy castings. Various styles are available to fit any manufacturers signal. They allow positive positioning of the signal head without misalignment. Supplied complete with stainless steel hardware and wire covers.

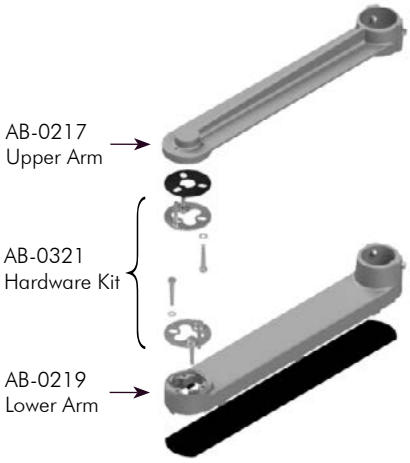

1-Way Arm Kit, 14" CTC, Alum for ICC Ped Head

AB-4012 - [ ] Coating

PNC=Process No Color
P_ _=Paint

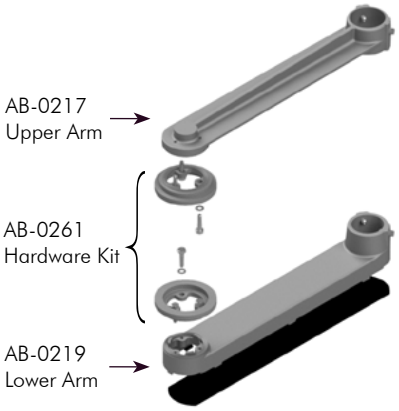

1-Way Arm Kit, 14" CTC, Alum for 3M OPS Signals, Tri-Stud

AB-5000 - [ ] Coating

PNC=Process No Color
P_ _=Paint

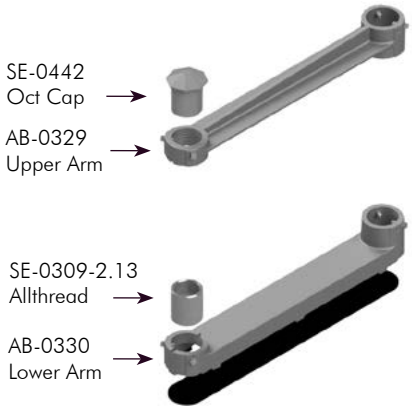

1-Way Arm Kit, 16" CTC, for OPS Signals, 1-1/2" NPS

AB-5006 - [ ] Coating

PNC=Process No Color
P_ _=Paint

Note: 1. All assemblies are supplied standard with stainless steel slotted washer and fasteners.
2. See Reference Section for available paint colors.

2-Way Astro-Brac Arm Kits

All Pelco arm kits are durable aluminum alloy castings. Various styles are available to fit any manufacturers signal. They allow positive positioning of the signal head without misalignment. Supplied complete with stainless steel hardware and wire covers.

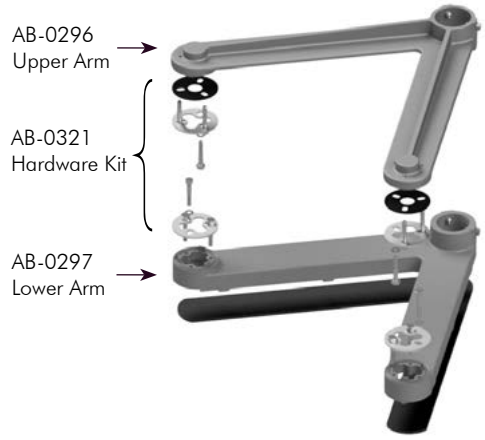

2-Way Arm Kit, 16" CTC, Alum

AB-5008 - [ ] Coating

PNC=Process No Color
P_ _=Paint

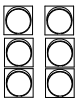

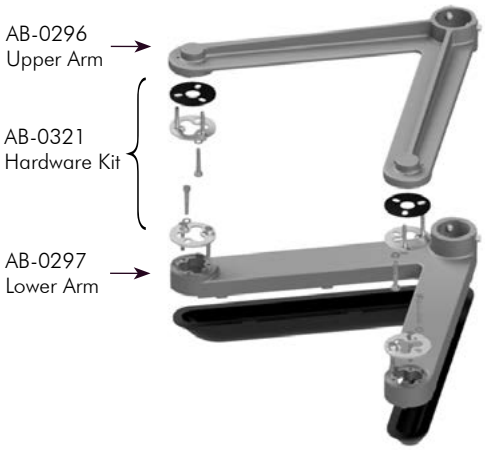

2-Way Arm Kit, 16" CTC, Alum Large Capacity

AS-5008 - [ ] Coating

PNC=Process No Color
P_ _=Paint

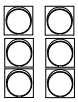

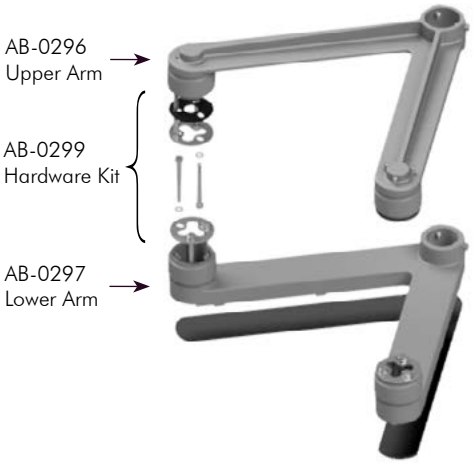

2-Way Arm Kit, 16" CTC, Alum for ICC Ped Head

AB-4009 - [ ] Coating

PNC=Process No Color
P_ _=Paint

Note: 1. All assemblies are supplied standard with stainless steel fasteners.
2. See Reference Section for available paint colors.

2-Way Variable Astro-Brac Arm Kits

All Pelco arm kits are durable aluminum alloy castings. Various styles are available to fit any manufacturers signal. They allow positive positioning of the signal head without misalignment. Supplied complete with stainless steel hardware and wire covers.

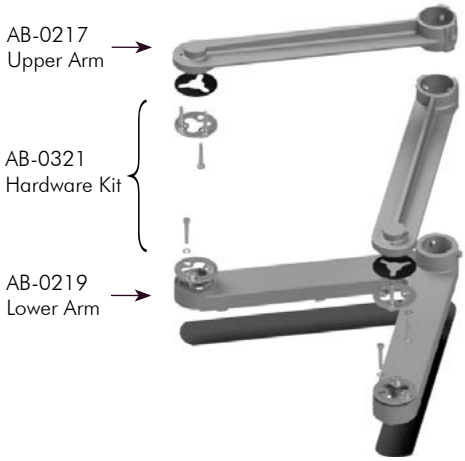

2-Way Variable Arm Kit, 16" CTC, Alum

AB-5007 - [ ] Coating

PNC=Process No Color
P_ _=Paint

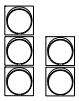

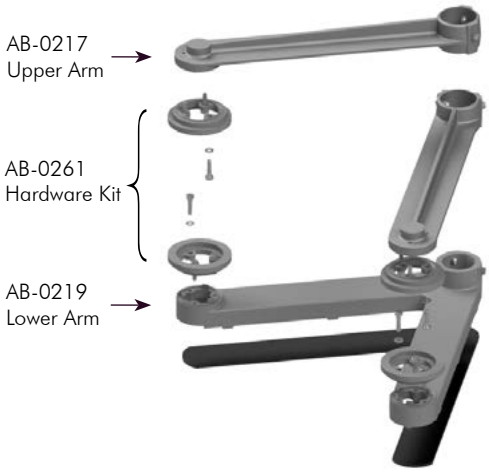

2-Way Variable Arm Kit, 16" CTC, Alum for OPS Signals

AB-5011 - [ ] Coating

PNC=Process No Color
P_ _=Paint

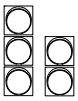

Note: 1. All assemblies are supplied standard with stainless steel fasteners.
2. See Reference Section for available paint colors.

Cluster Astro-Brac Arm Kits

All Pelco arm kits are durable aluminum alloy castings. Various styles are available to fit any manufacturers signal. They allow positive positioning of the signal head without misalignment. Supplied complete with stainless steel hardware and wire covers.

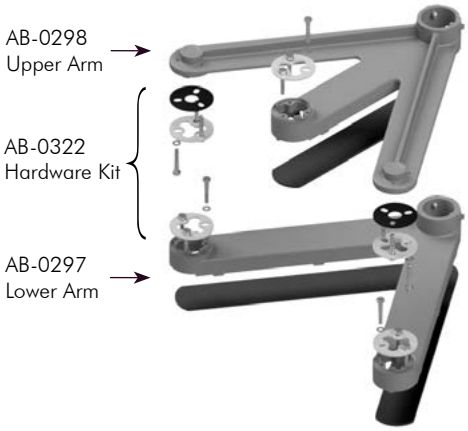

5-Section Cluster Arm Kit, 16" CTC, Alum

AB-5005 - [ ] Coating

PNC=Process No Color
P_ _=Paint

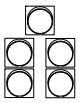

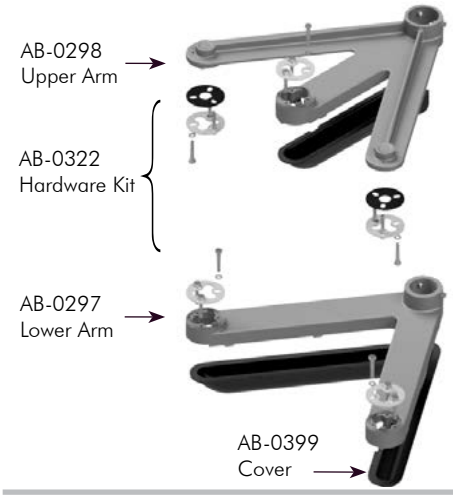

5-Section Cluster Arm Kit, 16" CTC, Alum Large Capacity

AS-5005 - [ ] Coating

PNC=Process No Color
P_ _=Paint

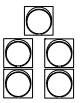

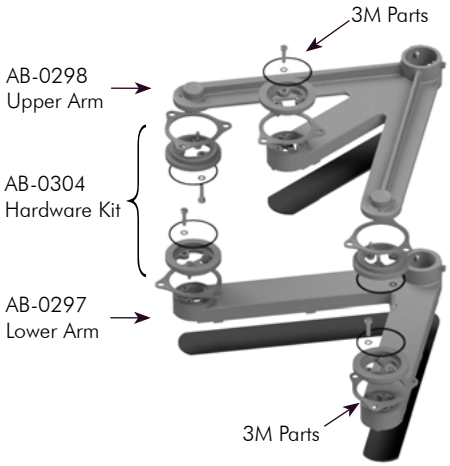

5-Section Cluster Arm Kit, 16" CTC, Alum for 3M OPS Signals

AB-5004 - [ ] Coating

PNC=Process No Color
P_ _=Paint

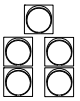

Note: 1. All assemblies are supplied standard with stainless steel slotted washers and fasteners.
2. See Reference Section for available paint colors.

Aluminum Gusseted Tubes

Supplied in lengths shown below, Pelco's vertical support tubing is made from high strength aluminum alloy. A unique shape and PVC insert insures a complete weather proof wiring installation anywhere along the entire length of the tube. The standard 46" tube will accommodate standard signal combinations up to 3-section 12", with the 58" and 74" lengths for 4 and 5-section combinations. Optional tube lengths are available for mounting OPS signals.

AB-0306
Gusseted Tube

AB-0392
PVC Insert

Astro-Brac Gusseted Tube w/ 3/4" Opening & PVC Insert, 1-1/2" x Length, Threaded One End

AB-2003 - [Length] - [Coating]

Length:
23=23"
37=37"
46=46"
58=58"
74=74"

Coating:
PNC=Process No Color
P_ _=Paint

AB-0307
Gusseted Tube

AB-0392
PVC Insert

Astro-Brac Gusseted Tube w/ 3/4" Opening & PVC Insert, 1-1/2" x Length, Threaded Both Ends

AB-2007 - [Length] - [Coating]

Length:
23=23"
37=37"
46=46"
58=58"
74=74"

Coating:
PNC=Process No Color
P_ _=Paint

Concealed Wiring Installation

Pelco's aluminum gusseted tubes allow wire entry at any point. The PVC insert conceals wiring from mast arm to signal head. Simply run wire through field-drilled hole in mast arm, through Astro-Brac, and into support tube. The hollow lower arm provides a channel for wire to be fed into signal head.

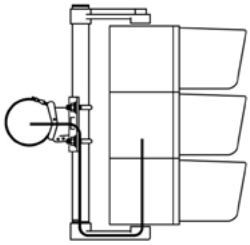

Note: 1. Standard lengths shown above. Lengths up to 120" maximum are available upon request.
2. See Reference Section for appropriate tube length for mouting both standard and OPS signals.
3. See Reference Section for available paint colors.

ISO 9001 www.intlcert.com

Aluminum Gusseted Tubes

Supplied in lengths shown below, Pelco's vertical support tubing is made from high strength aluminum alloy. A unique shape and PVC insert insures a complete weather proof wiring installation anywhere along the entire length of the tube. The standard 46" tube will accommodate standard signal combinations up to 3-section 12", with the 58" and 74" lengths for 4 and 5-section combinations. Optional tube lengths are available for mounting OPS signals.

Gusseted Tube w/ 3/4" Opening, 1-1/2" x Length, No Threads

AB-0390 - [Length] - [Coating]

Length: 23=23" 37=37" 46=46" 58=58" 74=74"

Coating: PNC=Process No Color P_ _=Paint

Gusseted Tube w/ 3/4" Opening, 1-1/2" x Length, Threaded One End

AB-0306 - [Length] - [Coating]

Length: 23=23" 37=37" 46=46" 58=58" 74=74"

Coating: PNC=Process No Color P_ _=Paint

Gusseted Tube w/ 3/4" Opening, 1-1/2" x Length, Threaded Both Ends

AB-0307 - [Length] - [Coating]

Length: 23=23" 37=37" 46=46" 58=58" 74=74"

Coating: PNC=Process No Color P_ _=Paint

Note: 1. Standard lengths shown above. Lengths up to 120" maximum are available upon request.
2. See Reference Section for appropriate tube length for mouting both standard and OPS signals.
3. See Reference Section for available paint colors.

Aluminum Tubes

Supplied in lengths shown below, Pelco's vertical support tubing is made from high strength aluminum alloy. The standard 46" tube will accommodate standard signal combinations up to 3-section 12", with the 58" and 74" lengths for 4 and 5-section combinations. Optional tube lengths are available for mounting OPS signals.

Tube, 1-1/2" SCH 40 Aluminum, 1-7/8" OD x Length, No Threads

		Length		Coating
SE-0484	-	[ ]	-	[ ]

Length:
23=23"
37=37"
46=46"
58=58"
74=74"

Coating:
PNC=Process No Color
P_ _=Paint

Tube, 2" SCH 40 Aluminum, 2-3/8" OD x Length, No Threads

		Length		Coating
SE-0494	-	[ ]	-	[ ]

Length:
23=23"
37=37"
46=46"
58=58"
74=74"

Coating:
PNC=Process No Color
P_ _=Paint

Note: 1. Standard lengths shown above. Lengths up to 120" maximum are available upon request.
2. See Reference Section for appropriate tube length for mouting both standard and OPS signals.
3. See Reference Section for available paint colors.

Astro-Brac Hardware Kits

AB-0321-SS **Hardware Kit, 1-Way Arm, 1/4”-20NC**

AB-0383-SS **Hardware Kit, CGB Arm, 1/4”-20NC**

AB-0261-SS **Hardware Kit, OPS 1-Way, 1/4”-20NC, 3M Adapter Ring**

AB-0322-SS **Hardware Kit, 5-Section Cluster, 1/4”-20NC**

AB-0304-SS **Hardware Kit, OPS 5-Section Cluster, 1/4”-20NC, 3M Adapter Ring**

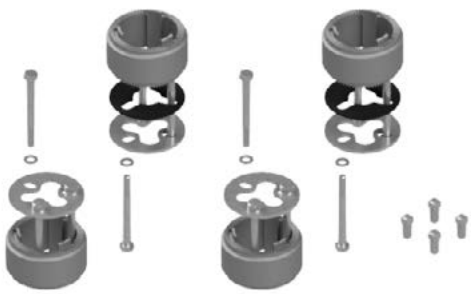

AB-0299-SS **Hardware Kit, 2-Way ICC Ped Signal, 1/4”-20NC, Ped Head Adapter**

Note: 1. All hardware kits are supplied standard with stainless slotted washers and fasteners.

Astro-Brac Hardware Kits

AB-0204-GLV **Clamp Screw Kit, 7/16”-14, Galvanized**

AB-0204-SS **Clamp Screw Kit, 7/16”-14, Stainless**

AB-0303-GLV **Clamp Screw Kit, 7/16”-14, Galvanized**

AB-0303-SS **Clamp Screw Kit, 7/16”-14, Stainless**

AB-0256-SS **V-Bolt Kit, 5/16”-18, Stainless**

Astro-Brac Hardware Kits

Cable Assy, Stainless Ends & Galv Cable

AB-0280 - [Length] - GLV

See Note

Cable Assy, Stainless Ends & Stainless Cable

AB-0320 - [Length] - SS

See Note

Note:
Cable Length: 62", 84", 96", 110", 120", 132", 144", 220", or 280".

Band Assy, Set of 2, Stainless w/ Clamps, Set Screws, & Groove Pins

AB-0509 - [Length] - SS

See Note

Note:
Band Length: 29", 36", 42", 48", 56", 72", 84", 96", or 114".

AB-0506-ZN2 **Ty-Back Restraining Clamp For use with Cable Stellar & Atlas Clamp Kits**

AB-1000-PNC **Helping Hand Assembly For use with Galaxy & Stellar Clamp Kits**

Aluminum 1-Way Hanger Assemblies

Pelco's Span Wire mountings are available in aluminum or iron with 1-1/2" or tri-stud fittings. Balance adjusters provide additional adjustment capabilities, while tether assemblies may be used to anchor the bottom of signals in windy applications.

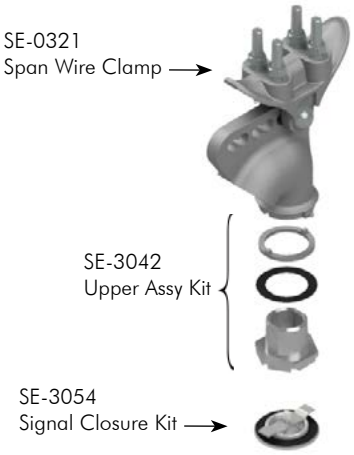

Span Wire Hanger Assy, Alum Cast Nipple

SE-3043 - [Bushing] - [Stainless Upgrade] - [Coating]

- Bushing: Blank=None; SB=Stainless Bushing
- Stainless Upgrade: Blank=Galv; SS=Stainless
- Coating: PNC=Process No Color; P__=Paint

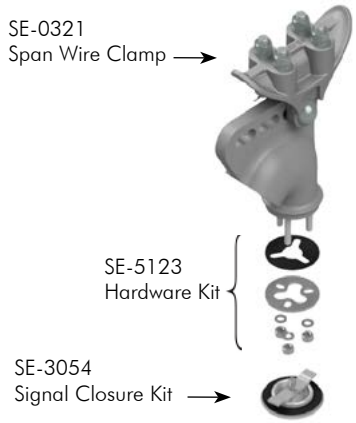

Span Wire Hanger Assy, Alum Tri-Stud

SE-5089 - [Bushing] - [Stainless Upgrade] - [Coating]

- Bushing: Blank=None; SB=Stainless Bushing
- Stainless Upgrade: Blank=Galv; SS=Stainless
- Coating: PNC=Process No Color; P__=Paint

Span Wire Hanger Assy, Alum w/ Iron Balance Adjuster Cast Nipple

SE-3033 - [Bushing] - [Stainless Upgrade] - [Coating]

- Bushing: Blank=None; Sb=Stainless Bushing
- Stainless Upgrade: Blank=Galv; SS=Stainless
- Coating: PNC=Process No Color; P__=Paint

Note:
Stainless upgrade to include stainless u-bolts and clevis pins.

Note: 1. All assemblies are supplied standard with stainless slotted washer and fasteners, with galvanized hardware on span wire clamps. Stainless upgrade shall include stainless steel hardware and pins.
2. See Reference Section for available paint colors.

Aluminum 1-Way Hanger Assemblies

Pelco's Span Wire mountings are available in aluminum or iron with 1-1/2" or tri-stud fittings. Balance adjusters provide additional adjustment capabilities, while tether assemblies may be used to anchor the bottom of signals in windy applications.

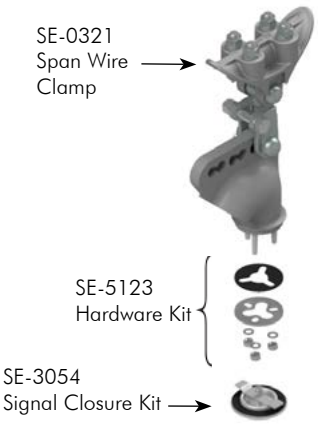

Span Wire Hanger Assy w/ Iron Balance Adjuster Tri-Stud, Alum

SE-5162 - [Bushing] - [Stainless Upgrade] - [Coating]

Bushing: Blank=None, SB=Stainless Bushing
Stainless Upgrade: Blank=Galv, SS=Stainless
Coating: PNC=Process No Color, P_ _=Paint

Span Wire Hanger Assy w/ PAL Balance Adjuster Cast Nipple, Alum

SE-3276 - [Bushing] - [Stainless Upgrade] - [Coating]

Bushing: Blank=None, SB=Stainless Bushing
Stainless Upgrade: Blank=Galv, SS=Stainless
Coating: PNC=Process No Color, P_ _=Paint

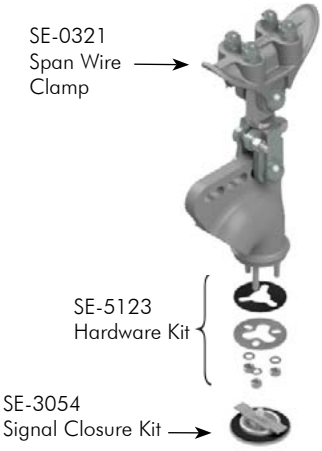

Span Wire Hanger Assy w/ PAL Balance Adjuster Tri-Stud, Alum

SE-5164 - [Bushing] - [Stainless Upgrade] - [Coating]

Bushing: Blank=None, SB=Stainless Bushing
Stainless Upgrade: Blank=Galv, SS=Stainless
Coating: PNC=Process No Color, P_ _=Paint

Note: 1. All assemblies are supplied standard with stainless slotted washer and fasteners, with galvanized hardware on span wire clamps. Stainless upgrade shall include stainless steel hardware and pins.
2. See Reference Section for available paint colors.

ISO 9001 www.intlcert.com

FREE-SWINGING
pelco PELCO PRODUCTS, INC.

Aluminum 1-Way Hanger Assemblies Tri-Stud

Pelco's Span Wire mountings are available in aluminum or iron with 1-1/2" or tri-stud fittings. Balance adjusters provide additional adjustment capabilities, while tether assemblies may be used to anchor the bottom of signals in windy applications.

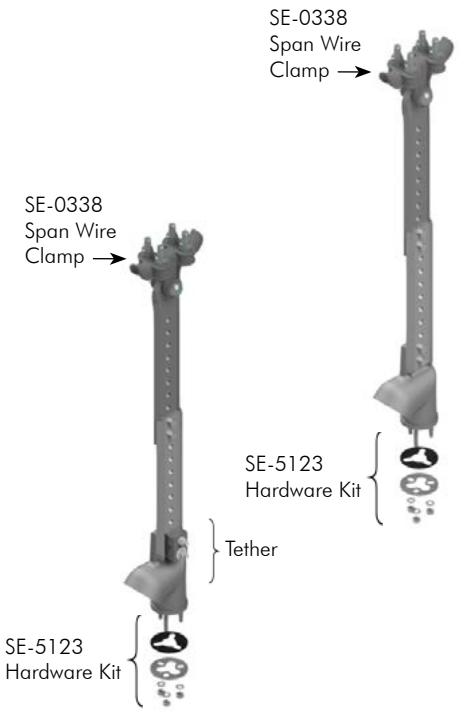

Span Wire Hanger Assy, w/ Iron Span Wire Clamp, Tri-Stud & Adjustable Extender, Alum

SE-5072 - [Extender] - [Stainless Upgrade] - [Coating]

Extender: 06=6" Length, 11=11" Length, 19=19" Length, 40=40" Length, 48=48" Length, 72=72" Length

Stainless Upgrade: Blank=Galv, SS=Stainless

Coating: PNC=Process No Color, P_ _=Paint

Span Wire Hanger Assy, w/ Iron Span Wire Clamp, Tri-Stud, Adjustable Extender & Tether, Alum

SE-5024 - [Extender] - [Stainless Upgrade] - [Coating]

Extender: 06=6" Length, 11=11" Length, 19=19" Length, 40=40" Length, 48=48" Length, 72=72" Length

Stainless Upgrade: Blank=Galv, SS=Stainless

Coating: PNC=Process No Color, P_ _=Paint

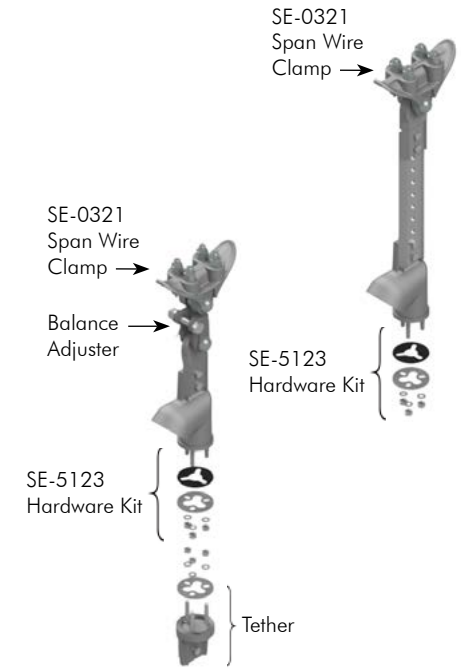

Span Wire Hanger Assy, w/ Alum Span Wire Clamp, Tri-Stud, Alum

SE-5196 - [Extender] - [Bushing] - [Stainless Upgrade] - [Coating]

Extender: 06=6" Length, 11=11" Length, 19=19" Length, 40=40" Length, 48=48" Length, 72=72" Length

Bushing: Blank=None, SB=Stainless Bushing

Stainless Upgrade: Blank=Galv, SS=Stainless

Coating: PNC=Process No Color, P_ _=Paint

Span Wire Hanger Assy, w/ Alum Span Wire Clamp, Tri-Stud, Iron Balance Adjuster & Tether, Alum

SE-5073 - [Bushing] - [Stainless Upgrade] - [Coating]

Bushing: Blank=None, SB=Stainless Bushing

Stainless Upgrade: Blank=Galv, SS=Stainless

Coating: PNC=Process No Color, P_ _=Paint

Note: 1. All assemblies are supplied standard with stainless slotted washer and fasteners, with galvanized hardware on span wire clamps. Stainless upgrade shall include stainless steel hardware and pins.
2. See Reference Section for available paint colors.

Aluminum 2-Way, 3-Way & 4-Way Span Wire Hanger Assemblies

Pelco's Span Wire mountings are available in aluminum or iron with 1-1/2" or tri-stud fittings. Balance adjusters provide additional adjustment capabilities, while tether assemblies may be used to anchor the bottom of signals in windy applications.

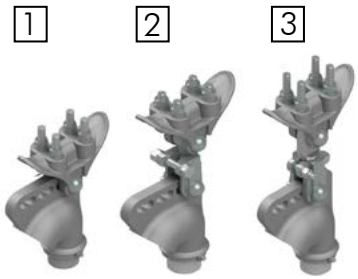

		Bushing	Stainless Upgrade	Coating	
1.	SE-3019 -	☐	- ☐	- ☐	**Span Wire Hanger, 1-1/2" NPS**
2.	SE-3272 -	☐	- ☐	- ☐	**Span Wire Hanger, 1-1/2" NPS w/ Iron Balance Adjuster**
3.	SE-3274 -	☐	- ☐	- ☐	**Span Wire Hanger, 1-1/2" NPS w/ PAL Balance Adjuster**
		Blank=None SB=Stainless Bushing	Blank=Galv SS=Stainless	PNC=Process No Color P_ _=Paint	

Note: For use with Upper & Lower Arm Assy's below.

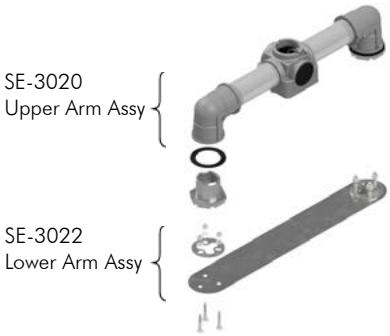

Upper & Lower Arm Assy, 2-Way 16-1/2" CTC, Alum

SE-3038 - ☐ Coating

PNC=Process No Color
P_ _=Paint

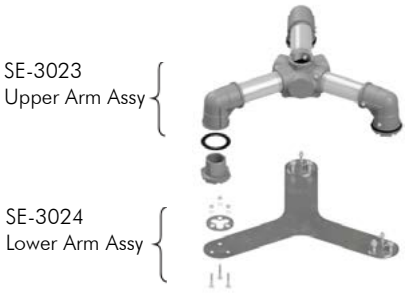

Upper & Lower Arm Assy, 3-Way 16-1/2" CTC, Alum

SE-3039 - ☐ Coating

PNC=Process No Color
P_ _=Paint

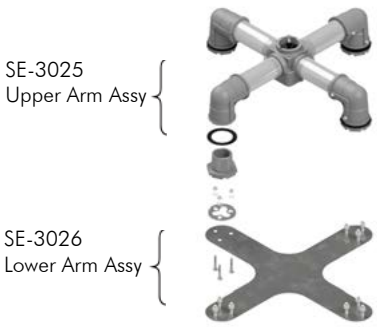

Upper & Lower Arm Assy, 4-Way 16-1/2" CTC, Alum

SE-3040 - ☐ Coating

PNC=Process No Color
P_ _=Paint

Note: 1. All assemblies are supplied standard with stainless slotted washer and fasteners, with galvanized hardware on span wire clamps. Stainless upgrade shall include stainless steel hardware and pins.
2. See Reference Section for available paint colors.

ISO 9001 www.intlcert.com

Aluminum 2-Way, 3-Way & 4-Way Span Wire Hanger Assemblies

Pelco's Span Wire mountings are available in aluminum or iron with 1-1/2" or tri-stud fittings. Balance adjusters provide additional adjustment capabilities, while tether assemblies may be used to anchor the bottom of signals in windy applications.

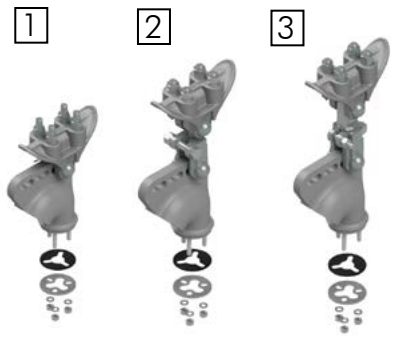

1. SE-5063 - [Bushing] - [Stainless Upgrade] - [Coating] **Span Wire Hanger, Tri-Stud**
2. SE-5088 - [Bushing] - [Stainless Upgrade] - [Coating] **Span Wire Hanger, Tri-Stud w/ Iron Balance Adjuster**
3. SE-5163 - [Bushing] - [Stainless Upgrade] - [Coating] **Span Wire Hanger, Tri-Stud w/ PAL Balance Adjuster**

Bushing: Blank=None, SB=Stainless Bushing
Stainless Upgrade: Blank=Galv, SS=Stainless
Coating: PNC=Process No Color, P_ _=Paint

Note: For use with Upper & Lower Arm Assy's below.

Upper & Lower Arm Assy, 2-Way 17" CTC, Cast Tri-Stud, Alum

SE-5061 - [Coating]

PNC=Process No Color
P_ _=Paint

Upper & Lower Arm Assy, 3-Way 17" CTC, Cast Tri-Stud, Alum

SE-5094 - [Coating]

PNC=Process No Color
P_ _=Paint

Upper & Lower Arm Assy, 4-Way 17" CTC, Cast Tri-Stud, Alum

SE-5097 - [Coating]

PNC=Process No Color
P_ _=Paint

Note: 1. All assemblies are supplied standard with stainless slotted washer and fasteners, with galvanized hardware on span wire clamps. Stainless upgrade shall include stainless steel hardware and pins.
2. See Reference Section for available paint colors.

Aluminum 5-Section Cluster Span Wire Hanger Assemblies

Pelco's Span Wire mountings are available in aluminum or iron with 1-1/2" or tri-stud fittings. Balance adjusters provide additional adjustment capabilities, while tether assemblies may be used to anchor the bottom of signals in windy applications.

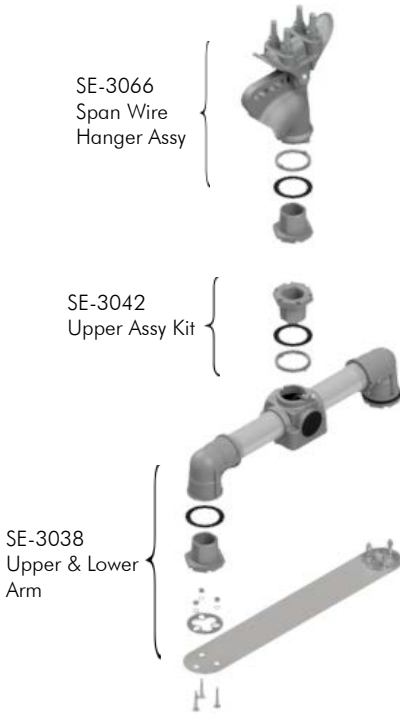

Cluster Assy, 5-Section 16-1/2" CTC, Cast Nipple, Alum

SE-3120 - [Bushing] - [Stainless Upgrade] - [Coating]

- Bushing: Blank=None; SS=Stainless Bushing
- Stainless Upgrade: Blank=Galv; SS=Stainless
- Coating: PNC=Process No Color; P_ _=Paint

Cluster Assy, 5-Section 16-1/2" CTC, Cast Nipple, Alum

SE-3137 - [Bushing] - [Stainless Upgrade] - [Coating]

- Bushing: Blank=None; SS=Stainless Bushing
- Stainless Upgrade: Blank=Galv; SS=Stainless
- Coating: PNC=Process No Color; P_ _=Paint

Note: 1. All assemblies are supplied standard with stainless slotted washer and fasteners, with galvanized hardware on span wire clamps. Stainless upgrade shall include stainless steel hardware and pins.
2. See Reference Section for available paint colors.

ISO 9001 www.intlcert.com

FREE-SWINGING
pelco PELCO PRODUCTS, INC.

Aluminum 5-Section Cluster Span Wire Hanger Assemblies

Pelco's Span Wire mountings are available in or iron aluminum with 1-1/2" or tri-stud fittings. Balance adjusters provide additional adjustment capabilities, while tether assemblies may be used to anchor the bottom of signals in windy applications.

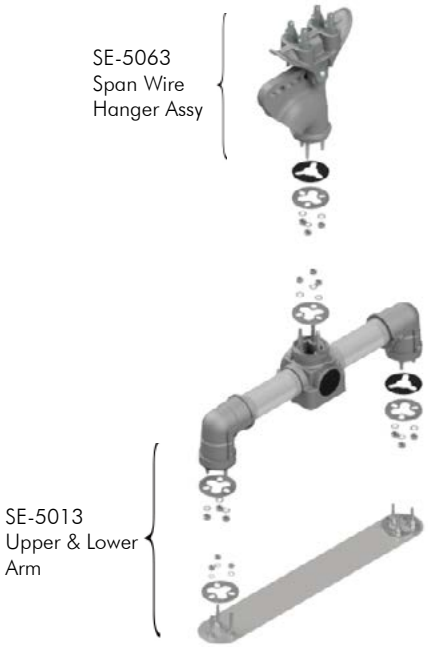

Cluster Assy, 5-Section 16-1/2" CTC, Cast Nipple, Alum

SE-5166 - [Bushing] - [Stainless Upgrade] - [Coating]

- Bushing: Blank=None; SS=Stainless Bushing
- Stainless Upgrade: Blank=Galv; SS=Stainless
- Coating: PNC=Process No Color; P_ _=Paint

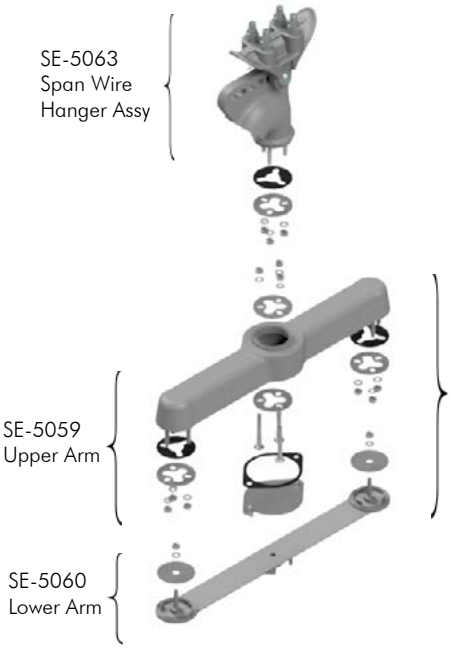

Cluster Assy, 5-Section 16-1/2" CTC, Cast Nipple, Alum

SE-5165 - [Bushing] - [Stainless Upgrade] - [Coating]

- Bushing: Blank=None; SS=Stainless Bushing
- Stainless Upgrade: Blank=Galv; SS=Stainless
- Coating: PNC=Process No Color; P_ _=Paint

Note: 1. All assemblies are supplied standard with stainless slotted washer and fasteners, with galvanized hardware on span wire clamps. Stainless upgrade shall include stainless steel hardware and pins.
2. See Reference Section for available paint colors.

12 Circuit Disconnect Hanger Assemblies

Pelco's Disconnect Hangers are available in 12-circuit and 18-circuit with 1-1/2" threaded or slip top and 1-1/2" threaded or tri-stud bottom hubs.

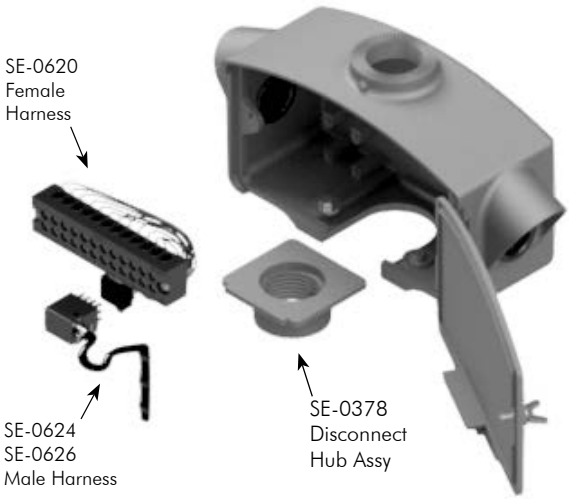

Disconnect Hanger, 12-Circuit 1-1/2" NPS Top & Bottom Hub w/ 4' Harness, Alum

SE-3073 - [ ] Coating

PNC=Process No Color
P_ _=Paint

Disconnect Hanger, 12-Circuit 1-1/2" NPS Top & Bottom Hub w/ 7' Harness, Alum

SE-3195 - [ ] Coating

PNC=Process No Color
P_ _=Paint

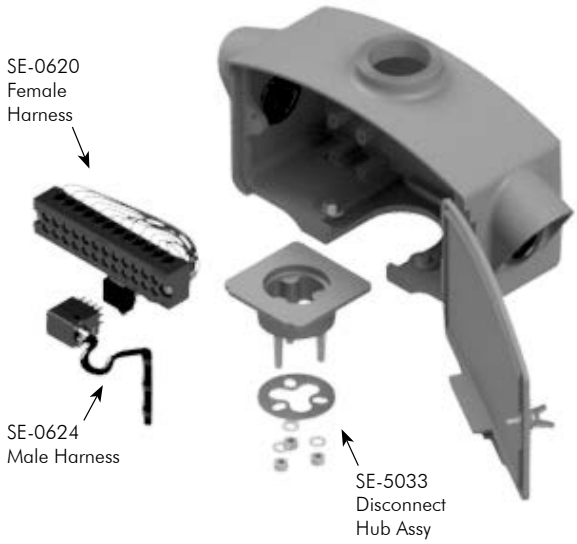

Disconnect Hanger, 12-Circuit 2" Slip Top & Tri-Stud Bottom Hub w/ 4' Harness, Alum

SE-5031 - [ ] Coating

PNC=Process No Color
P_ _=Paint

Note: 1. All harnesses come with 18 AWG wire pre-tinned and numbered on 3" centers.
2. All assemblies are supplied standard with stainless steel slotted washers and fasteners.
3. See Reference Section for available paint colors.

ISO 9001
www.intlcert.com

18 Circuit Disconnect Hanger Assemblies

Pelco's Disconnect Hangers are available in 12-circuit and 18-circuit with 1-1/2" threaded or slip top and 1-1/2" threaded or tri-stud bottom hubs.

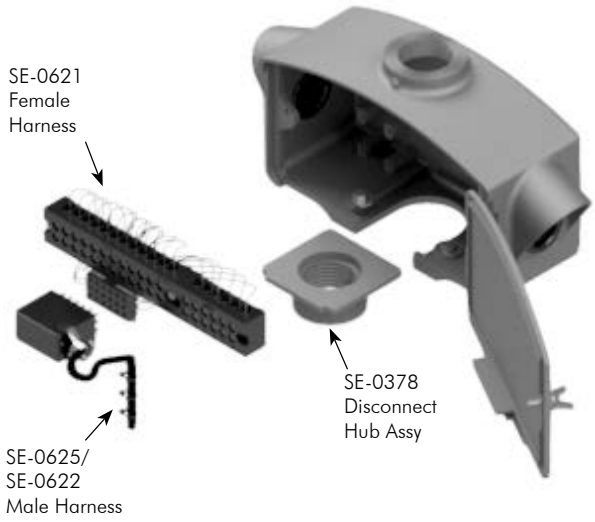

Disconnect Hanger, 18-Circuit 1-1/2" NPS Top & Bottom Hub w/ 4' Harness, Alum

SE-3077 - [ ] Coating

PNC=Process No Color
P_ _=Paint

Disconnect Hanger, 18-Circuit 1-1/2" NPS Top & Bottom Hub w/ 7' Harness

SE-3196 - [ ] Coating

PNC=Process No Color
P_ _=Paint

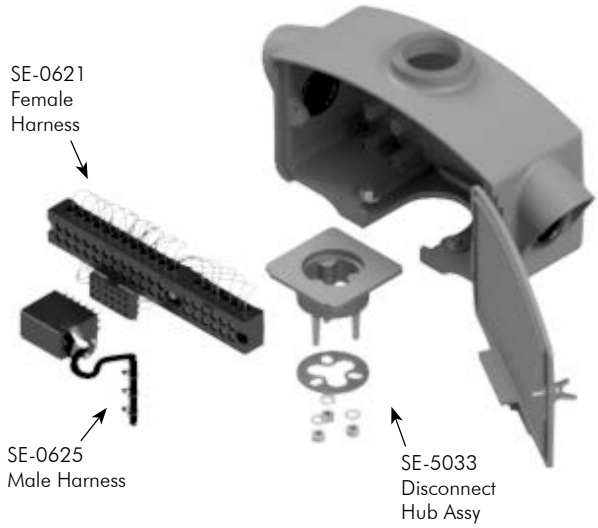

Disconnect Hanger, 18-Circuit 2" Slip Top & Tri-Stud Bottom Hub w/ 4' Harness, Alum

SE-5032 - [ ] Coating

PNC=Process No Color
P_ _=Paint

Note: 1. All harnesses come with 18 AWG wire pre-tinned and numbered on 3" centers.
2. All assemblies are supplied standard with stainless steel slotted washers and fasteners.
3. See Reference Section for available paint colors.

Span Wire Terminal Compartment

Pelco's Disconnect Hangers are available in 12-circuit and 18-circuit with 1-1/2" threaded or slip top and 1-1/2" threaded or tri-stud bottom hubs.

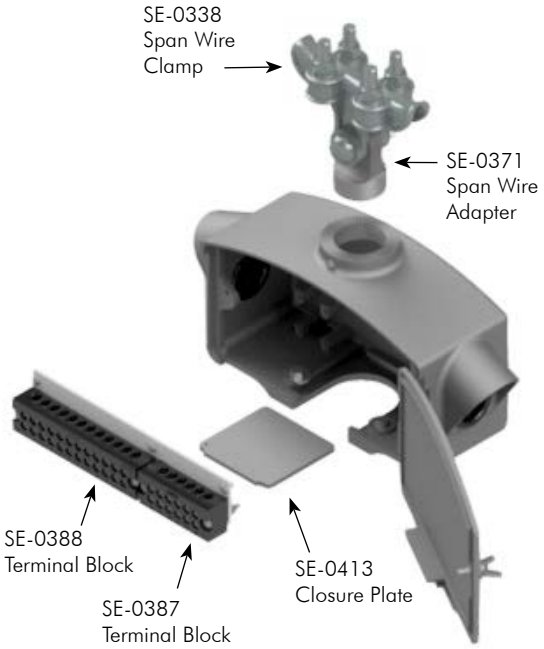

Span Wire Terminal Compartment, 18-Circuit w/ Iron Hanger Assembly, Alum

SE-3092 - [ ] - [ ]

Stainless Upgrade: Blank=Galv, SS=Stainless

Coating: PNC=Process No Color, P_ _=Paint

Note:
Stainless upgrade to include stainless u-bolts and clevis pins.

Cable Clamp Kit, 2-Cable, Alum

SE-4201 - [ ]

Coating: PNC=Process No Color, P_ _=Paint

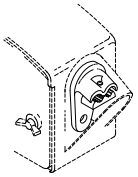

Note: 1. All assemblies are supplied standard with stainless slotted washer and fasteners, with galvanized hardware on span wire clamps. Stainless upgrade shall include stainless steel hardware and pins.
2. See Reference Section for available paint colors.

Hanger Assemblies

Various hanger assemblies are available for mounting Disconnects. Assemblies are available with or without span wire clamps, balance adjusters, and extenders to fit any specific requirement.

Hanger Assy, Span Wire Adapter, 1-1/2" NPS, Alum

SE-5215 - [ ] - [ ] - [ ]

Bushing	Stainless Upgrade	Coating
Blank=None SS=Stainless Bushing	Blank=Galv SS=Stainless	PNC=Process No Color P_ _=Paint

Hanger Assy, Span Wire, Tri-Stud Balance Adjuster, Alum

SE-5216 - [ ] - [ ] - [ ]

Bushing	Stainless Upgrade	Coating
Blank=None SS=Stainless Bushing	Blank=Galv SS=Stainless	PNC=Process No Color P_ _=Paint

Balance Assy, Tri-Stud, 3/4" Width, Alum

SE-5034 - [ ] - [ ]

Bushing	Coating
Blank=None SS=Stainless Bushing	PNC=Process No Color P_ _=Paint

Hanger Assy, Span Wire, Tri-Stud Connector, Alum

SE-5217 - [ ] - [ ] - [ ]

Bushing	Stainless Upgrade	Coating
Blank=None SS=Stainless Bushing	Blank=Galv SS=Stainless	PNC=Process No Color P_ _=Paint

Hanger Assy, Tri-Stud, 1/2" Width, Alum

SE-5036 - [ ] - [ ]

Bushing	Coating
Blank=None SS=Stainless Bushing	PNC=Process No Color P_ _=Paint

Note: 1. All assemblies are supplied standard with stainless slotted washer and fasteners, with galvanized hardware on span wire clamps. Stainless upgrade shall include stainless steel hardware and pins.
2. See Reference Section for available paint colors.

Hanger Assemblies

Various hanger assemblies are available for mounting Disconnects. Assemblies are available with or without span wire clamps, balance adjusters, and extenders to fit any specific requirement.

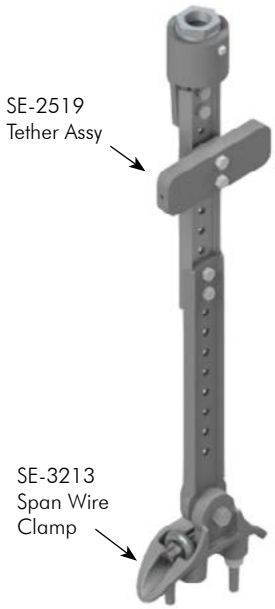

Hanger Assy, Opticom Preemption, 1" NPT w/ Span Wire Clamp & Tether, Alum

	Extender		Stainless Upgrade		Coating
SE-3333 -	☐	-	☐	-	☐
	Blank=None 11=11" Extender 19=19" Extender 40=40" Extender 72=72" Extender		Blank=Galv SS=Stainless		PNC=Process No Color P_ _=Paint

Note: 1. All assemblies are supplied standard with stainless slotted washer and fasteners, with galvanized hardware on span wire clamps. Stainless upgrade shall include stainless steel hardware and pins.
2. See Reference Section for available paint colors.

FREE-SWINGING
pelco PELCO PRODUCTS, INC.
ISO 9001 www.intlcert.com

Hanger Assemblies

Various hanger assemblies are available for mounting Disconnects. Assemblies are available with or without span wire clamps, balance adjusters, and extenders to fit any specific requirement.

Hanger Assy, Tri-Stud Adjustable Span Wire Clamp & Tether, Alum

SE-5118 - [Bushing] - [Stainless Upgrade] - [Coating]

- Bushing: Blank=None; SS=Stainless Bushing
- Stainless Upgrade: Blank=Galv; SS=Stainless
- Coating: PNC=Process No Color; P_ _=Paint

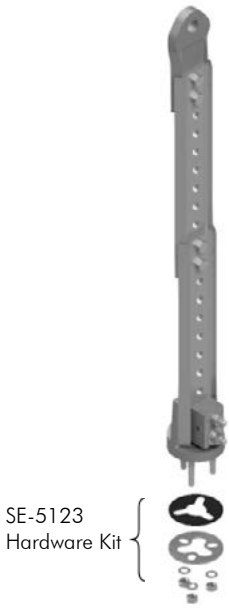

Hanger Assy, Tri-Stud Adjustable Tether, Alum

SE-5055 - [Bushing] - [Coating]

- Bushing: Blank=None; SS=Stainless Bushing
- Coating: PNC=Process No Color; P_ _=Paint

Note: 1. All assemblies are supplied standard with stainless slotted washer and fasteners, with galvanized hardware on span wire clamps. Stainless upgrade shall include stainless steel hardware and pins.
2. See Reference Section for available paint colors.

Aluminum Horizontal Span Wire Assemblies

Horizontal assemblies are available with aluminum or iron span wire clamps and wire outlet body for up to a 5-section signal.

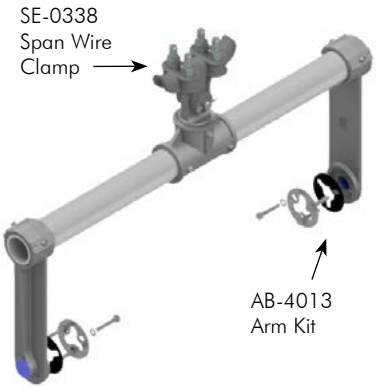

Horizontal Span Wire Assy w/ Slip Tee, Iron Clamp, Alum

AB-0127 - [Signal Section] - [Stainless Upgrade] - [Coating]

Signal Section: 1=1 Sec, 2=2 Sec, 3=3 Sec, 4=4 Sec, 5=5 Sec

Stainless Upgrade: Blank=Galv, SS=Stainless

Coating: PNC=Process No Color, P_ _=Paint

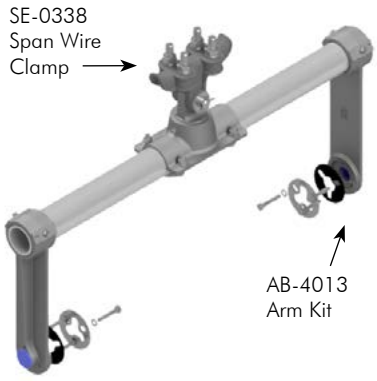

Horizontal Span Wire Assy w/ Tube Saddle, Iron Clamp, Alum

AB-0123 - [Signal Section] - [Stainless Upgrade] - [Coating]

Signal Section: 1=1 Sec, 2=2 Sec, 3=3 Sec, 4=4 Sec, 5=5 Sec

Stainless Upgrade: Blank=Galv, SS=Stainless

Coating: PNC=Process No Color, P_ _=Paint

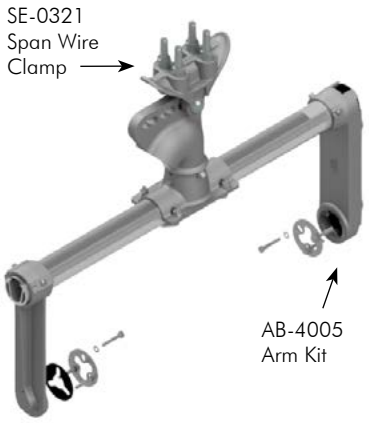

Horizontal Span Wire Assy w/ Wire Outlet Body, Alum

AB-0122 - [Signal Section] - [Bushing] - [Stainless Upgrade] - [Coating]

Signal Section: 1=1 Sec, 2=2 Sec, 3=3 Sec, 4=4 Sec, 5=5 Sec

Bushing: Blank=None, SS=Stainless Bushing

Stainless Upgrade: Blank=Galv, SS=Stainless

Coating: PNC=Process No Color, P_ _=Paint

Note: 1. All assemblies are supplied standard with stainless slotted washer and fasteners, with galvanized hardware on span wire clamps. Stainless upgrade shall include stainless steel hardware and pins.
2. See Reference Section for available paint colors.

ISO 9001 www.intlcert.com

Iron 1-Way Hanger Assemblies

Pelco's Span Wire mountings are available in aluminum or iron with 1-1/2" or tri-stud fittings. Balance adjusters provide additional adjustment capabilities, while tether assemblies may be used to anchor the bottom of signals in windy applications.

Hanger Assy, Tri-Stud, Iron

SE-5090 - [ ] (Coating: P_ _=Paint)

Span Wire Hanger Assy, Iron w/ Signal Closure Kit

SE-3139 - [ ] (Stainless Upgrade: Blank=Galv, SS=Stainless) - [ ] (Coating: P_ _=Paint)

Span Wire Hanger Assy, Iron w/ J-Bolts & Signal Closure Kit

SE-3250 - [ ] (Stainless Upgrade: Blank=Galv, SS=Stainless) - [ ] (Coating: P_ _=Paint)

Span Wire Hanger Assy, Iron w/ Balance Adjuster & Signal Closure Kit

SE-3151 - [ ] (Stainless Upgrade: Blank=Galv, SS=Stainless) - [ ] (Coating: P_ _=Paint)

Span Wire Hanger Assy, Iron w/ PAL Balance Adjuster & Signal Closure Kit

SE-3277 - [ ] (Stainless Upgrade: Blank=Galv, SS=Stainless) - [ ] (Coating: P_ _=Paint)

Note: 1. All assemblies are supplied standard with stainless slotted washer and fasteners, with galvanized hardware on span wire clamps. Stainless upgrade shall include stainless steel hardware and pins.
2. See Reference Section for available paint colors.

Iron 2-Way, 3-Way & 4-Way Span Wire Hanger Assemblies

Pelco's Span Wire mountings are available in aluminum or iron with 1-1/2" or tri-stud fittings. Balance adjusters provide additional adjustment capabilities, while tether assemblies may be used to anchor the bottom of signals in windy applications.

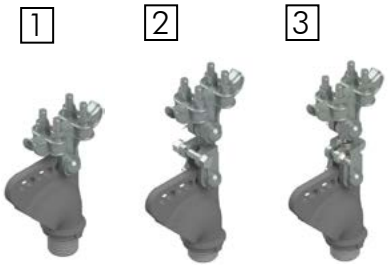

Stainless Upgrade | Coating

1. SE-3070 - [ ] - [ ] **Span Wire Hanger, 1-1/2" NPS**

2. SE-3273 - [ ] - [ ] **Span Wire Hanger, 1-1/2" NPS w/ Balance Adjuster**

3. SE-3275 - [ ] - [ ] **Span Wire Hanger, 1-1/2" NPS w/ PAL Balance Adjuster**

Blank=Galv, SS=Stainless | P__=Paint

Note: For use with Upper & Lower Arm Assy's below.

Upper & Lower Arm Assy, 2-Way 16-1/2" CTC

SE-3154 - [ ] (Coating: P__=Paint)

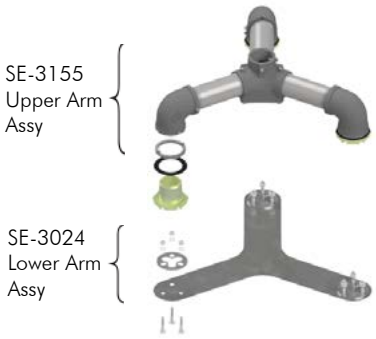

Upper & Lower Arm Assy, 3-Way 16-1/2" CTC

SE-3156 - [ ] (Coating: P__=Paint)

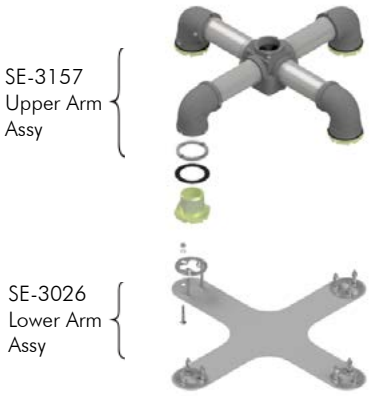

Upper & Lower Arm Assy, 4-Way 16-1/2" CTC

SE-3158 - [ ] (Coating: P__=Paint)

Note: 1. All assemblies are supplied standard with stainless slotted washer and fasteners, with galvanized hardware on span wire clamps. Stainless upgrade shall include stainless steel hardware and pins.
2. See Reference Section for available paint colors.

ISO 9001 www.intlcert.com

FREE-SWINGING

PELCO PRODUCTS, INC.

Iron 5-Section Cluster Span Wire Hanger Assemblies

Pelco's Span Wire mountings are available in aluminum or iron with 1-1/2" or tri-stud fittings. Balance adjusters provide additional adjustment capabilities, while tether assemblies may be used to anchor the bottom of signals in windy applications.

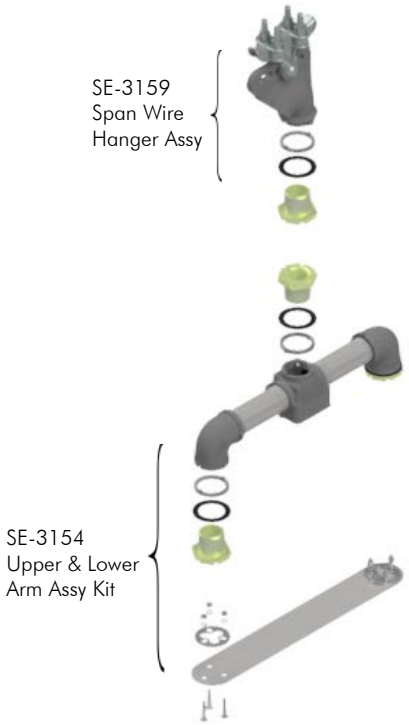

Cluster Assy, 5-Section 16-1/2" CTC

SE-3160 - [ ] - [ ]

Stainless Upgrade: Blank=Galv, SS=Stainless

Coating: P_ _=Paint

Cluster Assy, 5-Section 16-1/2" CTC

SE-3161 - [ ] - [ ]

Stainless Upgrade: Blank=Galv, SS=Stainless

Coating: P_ _=Paint

Note: 1. All assemblies are supplied standard with stainless slotted washer and fasteners, with galvanized hardware on span wire clamps. Stainless upgrade shall include stainless steel hardware and pins.
2. See Reference Section for available paint colors.

Signal Accessories

Pelco supplies various accessories for span wire mounted signs and signals. See Section T14 for additional components.

Lower Arm Assy, 2-Way, 16-1/2" CTC, Steel

SE-3162 - [ ] Coating

P_ _=Paint

Lower Arm Assy, 3-Way, 16-1/2" CTC, Steel

SE-3163 - [ ] Coating

P_ _=Paint

Lower Arm Assy, 4-Way, 16-1/2" CTC, Steel

SE-3164 - [ ] Coating

P_ _=Paint

Tether Assembly, Extended Bottom, Alum

SE-3307 - [ ] Length - [ ] Coating

6=6"
18=18"
28=28"

PNC=Process No Color
P_ _=Paint

Tether Assembly, Break-Away, 1-1/2" Pipe, Steel

SE-3055 - [ ] Coating

ZN1=Zinc1 Plated
P_ _=Paint

Tether Assembly, Non-Break-Away, Alum

SE-3293 - [ ] Coating

PNC=Process No Color
P_ _=Paint

Note: 1. All assemblies are supplied standard with stainless slotted washer and fasteners, with galvanized hardware on span wire clamps. Stainless upgrade shall include stainless steel hardware and pins.
2. See Reference Section for available paint colors.

ISO 9001 www.intlcert.com

pelco PELCO PRODUCTS, INC.

Signal Accessories

Pelco supplies various accessories for span wire mounted signs and signals. See Section T14 for additional components.

Tether Assembly, 1-1/2" Break-Away, Alum

SE-5121 - [Extender] - [Coating]

Extender: Blank=No Extender, 11=11", 19=19", 72=72"

Coating: PNC=Process No Color, P_ _=Paint

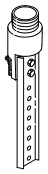

Note: Available with or without Extender Bar.

Tether Assembly, Tri-Stud Break-Away, Alum

SE-5050 - [Extender] - [Coating]

Extender: Blank=No Extender, 11=11", 19=19", 72=72"

Coating: PNC=Process No Color, P_ _=Paint

Note: Available with or without Extender Bar.

Tether Assembly, Single-Stud Break-Away, Alum

SE-5058 - [Extender] - [Coating]

Extender: Blank=No Extender, 11=11", 19=19", 72=72"

Coating: PNC=Process No Color, P_ _=Paint

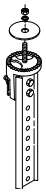

Note: Available with or without Extender Bar.

Extender Bar, Aluminum

SE-0507 - [Length] - [Coating]

Length: 11=11", 19=19", 72=72"

Coating: PNC=Process No Color, P_ _=Paint

Note: 1. All assemblies are supplied standard with stainless slotted washer and fasteners, with galvanized hardware on span wire clamps. Stainless upgrade shall include stainless steel hardware and pins.
2. See Reference Section for available paint colors.

Signal Accessories

Pelco supplies various accessories for span wire mounted signs and signals. See Section T14 for additional components.

Signal Spacer Kit w/ Aluminum Nipple, Alum Lockring, Alum Cast Nipple

SE-3306 - [Length] - [Coating]

Length: Nipple

Coating: PNC=Process No Color; P_ _=Paint

Signal Spacer Kit w/ Steel Nipple, Brass Lockring, Iron Cast Nipple

SE-3302 - [Length] - [Cast Nipple] - [Coating]

Length: Nipple

Cast Nipple: LCN=Long Cast Nipple

Coating: P_ _=Paint

Signal Spacer Kit w/ Aluminum Nipple, Tri-Stud

SE-5218 - [Length] - [Coating]

Length: 06=3-1/4" Nipple; 14=11-1/4" Nipple; 22=19-1/4" Nipple; 28=25-1/4" Nipple

Coating: P_ _=Paint

SM-0906-ZN2 **Opticom Cable Hanger, 1/2" Wire, 7/16"-14 x 3/4"-14 NPT, Iron, Zinc 2**

SE-4028-ZN1 **CGB 3/4", .55"-.65" Wire Range, Zinc 1**

SE-0490-ZN1 **CGB, 3/4", .625"-.75" Wire Range, Zinc 1**

SE-4216-ZN1 **CGB, 1", .55"-.625" Wire Range, Zinc 1**

Note: 1. All assemblies are supplied standard with stainless slotted washer and fasteners, with galvanized hardware on span wire clamps. Stainless upgrade shall include stainless steel hardware and pins.
2. See Reference Section for available paint colors.

ISO 9001 www.intlcert.com

Span Wire Hardware Kits

SE-5123-SS **Tri-Stud Hardware Kit w/ Gasket, 5/16”-18 Stainless Slotted Washer & Stainless Hardware**

SE-5122-SS **Tri-Stud Hardware Kit w/o Gasket, 5/16”-18 Stainless Slotted Washer & Stainless Hardware**

SE-5125-SS **Tri-Bolt Hardware Kit w/ Gasket, 5/16”-18 x 1-1/2” Hex Hd Bolts Stainless Slotted Washer & Stainless Hardware**

SE-5126-SS **Tri-Bolt Hardware Kit w/o Gasket, 5/16”-18 x 1-1/2” Hex Hd Bolts Stainless Slotted Washer & Stainless Hardware**

Note: 1. All kits are supplied standard with stainless steel slotted washers and fasteners.
2. See Section T14 for additional components available.

Span Wire Hardware Kits

SE-4112-SS **Signal to Signal Mounting Kit,**
5/16"-18 x 2-1/2" Carriage Bolts
Stainless Slotted Washer & Stainless Hardware

SE-3282-SS **Plumbizer Hardware Kit,**
5/16"-18 x 3-1/2" Carriage Bolts
Stainless Slotted Washer & Stainless Hardware

SE-4111-SS **Tri-Bolt Hardware Kit w/ Gasket,**
1/4"-20 x 1-1/2" Hex Hd Bolts
Stainless Slotted Washer & Stainless Hardware

SE-3227-SS **Lower Assembly Kit,**
1/4"-20 x 1-1/2" Carriage Bolts
Stainless Slotted Washer & Stainless Hardware

SE-5064-SS **Single-Stud Hardware Kit, 5/16"-18**
Stainless Washer & Stainless Hardware

Note: 1. All kits are supplied standard with stainless steel slotted washers and fasteners.
2. See Section T14 for additional components available.

ISO 9001 www.intlcert.com

FREE-SWINGING
pelco PELCO PRODUCTS, INC.

Aluminum 1-Way Side-of-Pole with Cast Nipples

Pelco's Side-of-Pole assemblies are designed to mount traffic and pedestrian signals on the side of traffic signal poles using an upper and lower arm. Available in aluminum or iron, and 1-1/2" NPS, tri-bolt, or tri-stud, and a vast array of hubs to accommodate both 1-way or 2-way signal configurations.

SE-3000-L
Upper Arm Assy

SE-3001-L
Lower Arm Assy

1-Way Upper & Lower Arm Assy, Alum Nipples, Alum

SE-3036 - [Nipple Length] - [Coating]

Nipple Length:
06=6"
08=8"
10=10"
12=12"
14=14"

Coating:
PNC=Process No Color
P_ _=Paint

Note:
See Components Section T14 for choice of hub plates.

SE-3036-10
Upper & Lower
Arm Assy

1-Way Upper & Lower Arm Assy, 10" Nipples, Universal Hub Plates, Alum

SE-3215 - [Coating]

Coating:
PNC=Process No Color
P_ _=Paint

SE-3036-10
Upper & Lower
Arm Assy

1-Way Upper & Lower Arm Assy, 10" Nipples, Large Pole Hub Plates, Alum

SE-3148 - [Coating]

Coating:
PNC=Process No Color
P_ _=Paint

Note: 1. All assemblies are supplied standard with stainless steel fasteners.
2. See Reference Section for available paint colors.

Aluminum 1-Way Side-of-Pole ICC Ped Head with Cast Nipples

Pelco's Side-of-Pole assemblies are designed to mount traffic and pedestrian signals on the side of traffic signal poles using an upper and lower arm. Available in aluminum or iron, and 1-1/2" NPS, tri-bolt, or tri-stud, and a vast array of hubs to accommodate both 1-way or 2-way signal configurations.

1-Way Upper & Lower ICC Ped Arm Assy, 12" Nipples, Alum

SE-3146 - [ ] Coating

PNC=Process No Color
P_ _=Paint

Note:
See Components Section T14 for choice of hub plates.

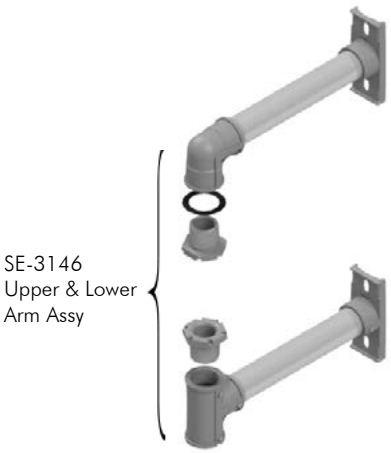

1-Way Upper & Lower ICC Ped Arm Assy, 12" Nipples, Universal Hub Plates, Alum

SE-3214 - [ ] Coating

PNC=Process No Color
P_ _=Paint

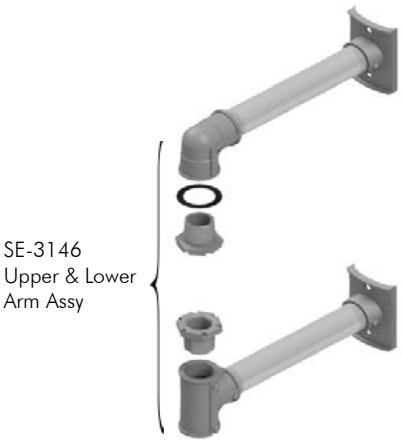

1-Way Upper & Lower ICC Ped Arm Assy, 12" Nipples, Large Pole Hub Plates, Alum

SE-3308 - [ ] Coating

PNC=Process No Color
P_ _=Paint

Note: 1. All assemblies are supplied standard with stainless steel fasteners.
2. See Reference Section for available paint colors.

Aluminum 2-Way Side-of-Pole with Cast Nipples

Pelco's Side-of-Pole assemblies are designed to mount traffic and pedestrian signals on the side of traffic signal poles using an upper and lower arm. Available in aluminum or iron, and 1-1/2" NPS, tri-bolt, or tri-stud, and a vast array of hubs to accommodate both 1-way or 2-way signal configurations.

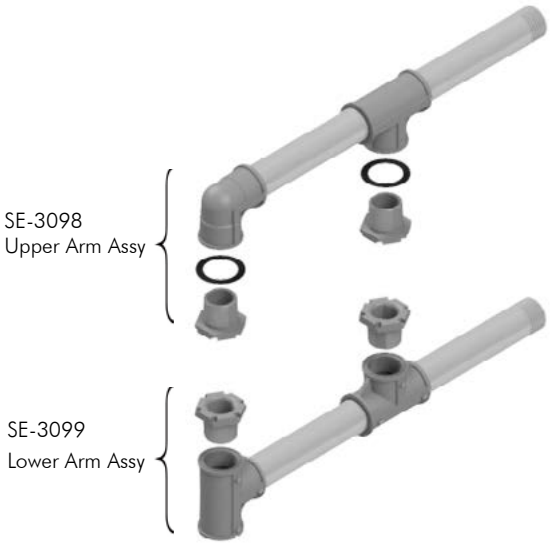

2-Way Upper & Lower Tandem Arm Assy, 10" Nipples, Alum

SE-3100 - [ ] Coating

PNC=Process No Color
P_ _=Paint

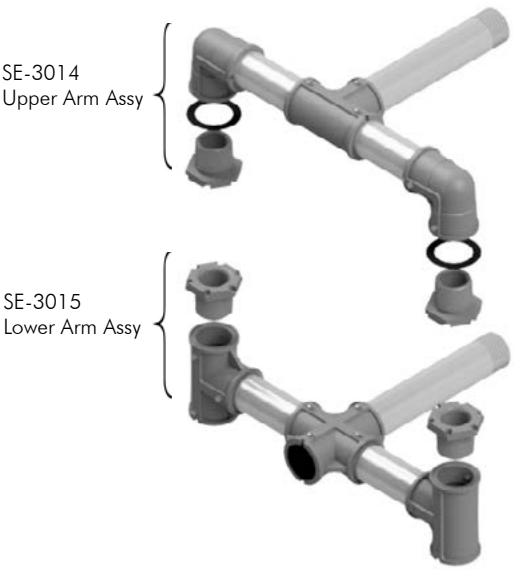

2-Way Upper & Lower Arm Assy, 16-1/2" CTC, Alum

SE-3075 - [ ] Coating

PNC=Process No Color
P_ _=Paint

Note: 1. All assemblies are supplied standard with stainless steel fasteners.
2. See Components Section T14 for choice of hub plates.
3. See Reference Section for available paint colors.

Aluminum 1 & 2-Way Side-of-Pole, Tri-Stud

Pelco's Side-of-Pole assemblies are designed to mount traffic and pedestrian signals on the side of traffic signal poles with an upper and lower arm. Available in aluminum or iron, and 1-1/2" NPS, tri-bolt, or tri-stud, and a vast array of hubs to accommodate both 1-way or 2-way signal configurations.

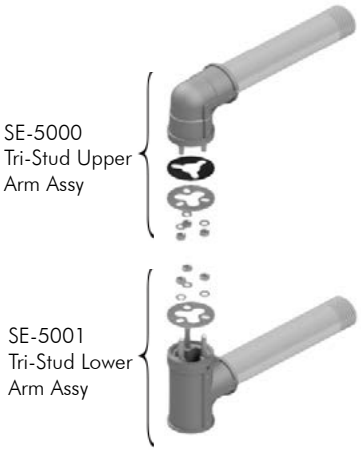

1-Way Upper & Lower Arm Assy, 10" Nipples, Alum

SE-5002 - [ ] Coating

PNC=Process No Color
P_ _=Paint

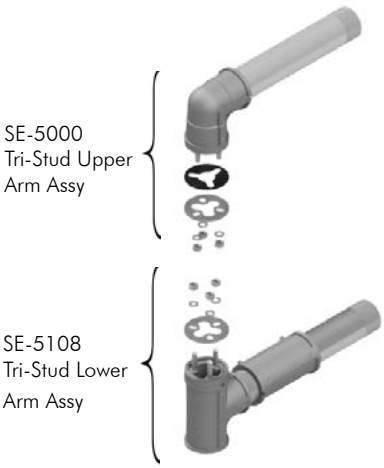

1-Way Upper & Lower Arm Assy, 10" Nipples w/ Adjustable Lower Arm Alum

SE-5109 - [ ] Coating

PNC=Process No Color
P_ _=Paint

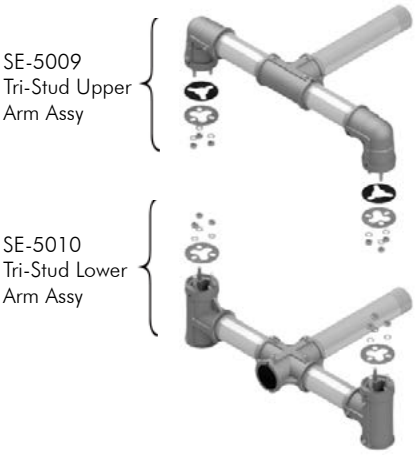

2-Way Upper & Lower Arm Assy, 16-1/2" CTC, Alum

SE-5011 - [ ] Coating

PNC=Process No Color
P_ _=Paint

Note: 1. All assemblies are supplied standard with stainless steel slotted washer and fasteners.
2. See Components Section T14 for choice of hub plates.
3. See Reference Section for available paint colors.

Aluminum Side-of-Pole

Pelco's Side-of-Pole assemblies are designed to mount traffic and pedestrian signals on the side of traffic signal poles with an upper and lower arm. Available in aluminum or iron, and 1-1/2" NPS, tri-bolt, or tri-stud, and a vast array of hubs to accommodate both 1-way or 2-way signal configurations.

1-Way Hub Assy, 1-1/2" NPS for 4-1/2" OD Pole

SE-3093 - [ ] Coating

PNC=Process No Color
P__=Paint

1-Way Hub Assy, 1-1/2" NPS, 2-7/8" to 3-1/2" OD Pole

SE-3216 - [ ] Coating

PNC=Process No Color
P__=Paint

2-Way Hub Assy, 1-1/2" NPS, 4-1/2" OD Pole

SE-3094 - [ ] Coating

PNC=Process No Color
P__=Paint

SE-5123
Hardware Kit

1-Way Tri-Stud for 8" & 12" Signals, 4-1/2" OD Pole

SE-0567 - [ ] Coating

PNC=Process No Color
P__=Paint

SE-4111
Hardware Kit

1-Way Tri-Stud for 8" Signals, 4-1/2" OD Pole

SE-5053 - [ ] Coating

PNC=Process No Color
P__=Paint

SE-4111
Hardware Kit

1-Way Tri-Stud for 8" Signals, 2-7/8" - 3-1/2" OD Pole

SE-5054 - [ ] Coating

PNC=Process No Color
P__=Paint

SE-5123
Hardware Kit

2-Way Tri-Stud for 8" & 12" Signals, 4-1/2" OD Pole

SE-5186 - [ ] Coating

PNC=Process No Color
P__=Paint

Note: 1. All assemblies are supplied standard with stainless steel slotted washer and fasteners.
2. See Reference Section for available paint colors.

Iron 1-Way Side-of-Pole with Cast Nipples

Pelco's Side-of-Pole assemblies are designed to mount traffic and pedestrian signals on the side of traffic signal poles with an upper and lower arm. Available in aluminum or iron, and 1-1/2" NPS, tri-bolt, or tri-stud, and a vast array of hubs to accommodate both 1-way or 2-way signal configurations.

1-Way Upper & Lower Arm Assy, Steel Nipples, Iron

SE-3167 - [Nipple Length] - [Coating]

Nipple Length:
06=6"
08=8"
10=10"
12=12"
14=14"

Coating:
P_ _=Paint

Note:
See Components Section T14 for choice of hub plates.

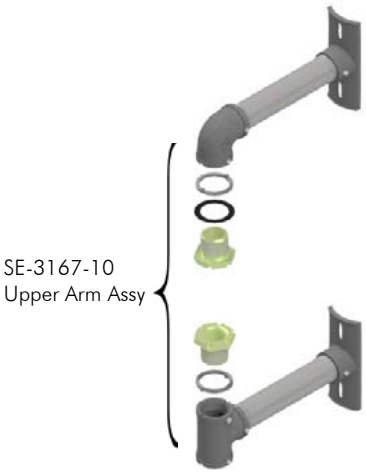

1-Way Upper & Lower Arm Assy, 10" Steel Nipples & Iron Hub

SE-3309 - [Coating]

Coating:
P_ _=Paint

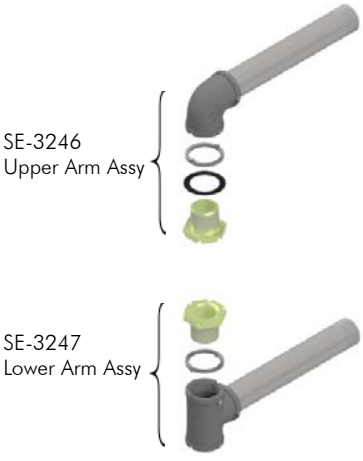

1-Way Upper & Lower ICC Ped Arm Assy, 12" Steel Nipples, Iron

SE-3248 - [Coating]

Coating:
P_ _=Paint

Note:
See Components Section T14 for choice of hub plates.

Note: 1. All assemblies are supplied standard with stainless steel fasteners.
2. See Reference Section for available paint colors.

Iron 2-Way Side-of-Pole with Cast Nipples

Pelco's Side-of-Pole assemblies are designed to mount traffic and pedestrian signals on the side of traffic signal poles with an upper and lower arm. Available in aluminum or iron, and 1-1/2" NPS, tri-bolt, or tri-stud, and a vast array of hubs to accommodate both 1-way or 2-way signal configurations.

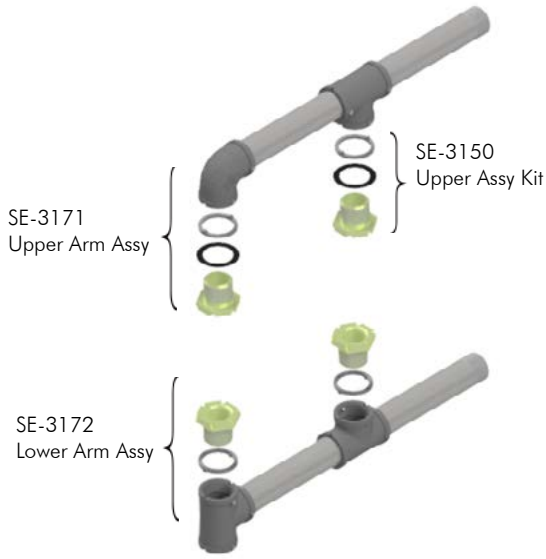

2-Way Upper & Lower Tandem Arm Assy, 10" Steel Nipples, Iron

SE-3173 - [ ]

Coating

PNC=Process No Color
P_ _=Paint

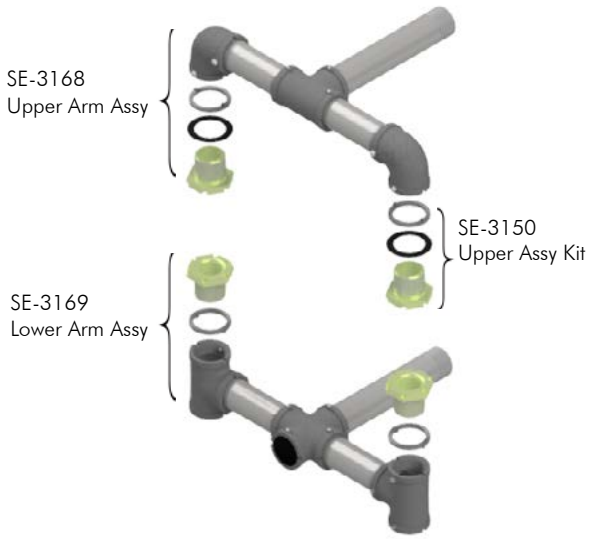

2-Way Upper & Lower Arm Assy, 16-1/2" CTC, Steel Nipples, Iron

SE-3170 - [ ]

Coating

PNC=Process No Color
P_ _=Paint

Note: 1. All assemblies are supplied standard with stainless steel fasteners.
2. See Components Section T14 for choice of hub plates.
3. See Reference Section for available paint colors.

Black Nylon 1-Way Side-of-Pole

Pelco's 1-Way Side-of-Pole, in black nylon, is a corrosion free signal mount that can be bolted or banded to the side of a pole. The assembly includes neoprene gaskets to fill the contour differences between the arms and the pole. If required, the plastic arms and octagonal closure caps can be painted.

1-Way Upper & Lower Arm Assy, Black Nylon

SE-3291 - [ ]

Coating

PNC=Process No Color
P__=Paint

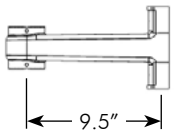

Signal Mounting Arm, Black Nylon

SE-3284 - [ ]

Coating

PNC=Process No Color
P__=Paint

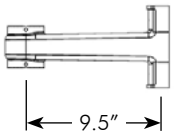

Note: 1. All assemblies are supplied standard with stainless steel fasteners.
2. See Reference Section for available wet paint colors.

Terminal Compartments Aluminum

Pelco's aluminum Terminal Compartments are available with a flat back or curved to fit onto the side of a pole. In-line and flat back Terminal Compartments are supplied with a 12-ciruit terminal strip and an ABS plastic door.

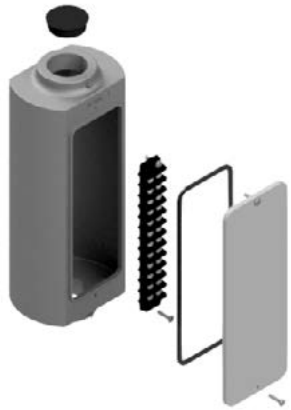

Terminal Compartment Assy, In-Line Flat Back, Top & Bottom Hubs, Alum

SE-3101 - [ ]

Coating

PNC=Process No Color
P_ _=Paint

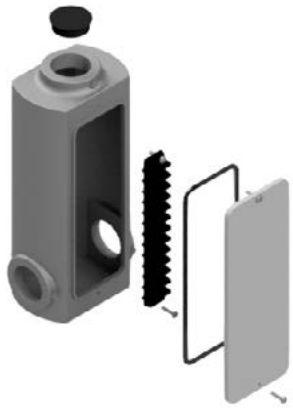

Terminal Compartment Assy, 2-Way Flat Back, Alum

SE-3083 - [ ]

Coating

PNC=Process No Color
P_ _=Paint

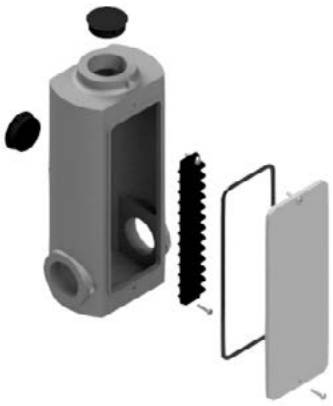

Terminal Compartment Assy, 2-Way Flat Back, Rear Hub, Alum

SE-3084 - [ ]

Coating

PNC=Process No Color
P_ _=Paint

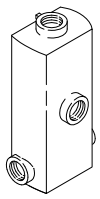

Rear View

Note: 1. All assemblies are supplied standard with stainless steel fasteners.
2. See Reference Section for available paint colors.

Terminal Compartments Aluminum

Pelco's aluminum Terminal Compartments are available with a flat back or curved to fit onto the side of a pole. Saddleback Terminal Compartments are supplied with a 12-ciruit terminal block and an ABS plastic door.

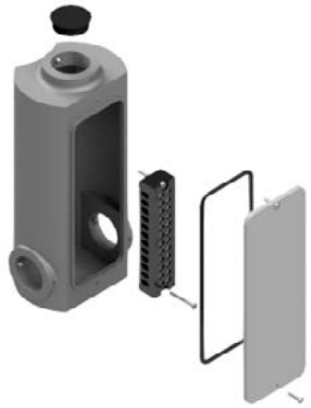

Terminal Compartment Assy, 2-Way Saddleback w/ Cable Entrance, Alum

SE-3081 - [ ] Coating

PNC=Process No Color
P__=Paint

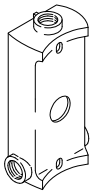

Rear View

Terminal Compartment Assy, 2-Way Saddleback w/ Cable Guide & Mounting Holes, Alum

SE-3078 - [ ] Coating

PNC=Process No Color
P__=Paint

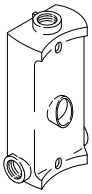

Rear View

Note: 1. All assemblies are supplied standard with stainless steel fasteners.
2. See Reference Section for available paint colors.

ISO 9001 www.intlcert.com

PELCO PRODUCTS, INC.

Terminal Compartments
Bronze & Iron

Pelco's bronze and iron Terminal Compartments are available with a curved back to fit onto the side of a pole. Saddleback Terminal Compartments are supplied with a 12-ciruit terminal block and an ABS plastic door.

Terminal Compartment Assy, 2-Way Saddleback w/ Cable Guide & Mounting Holes, Bronze

SE-4418 - [ ] Coating

PNC=Process No Color
P_ _=Paint

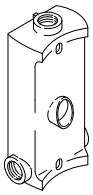

Rear View

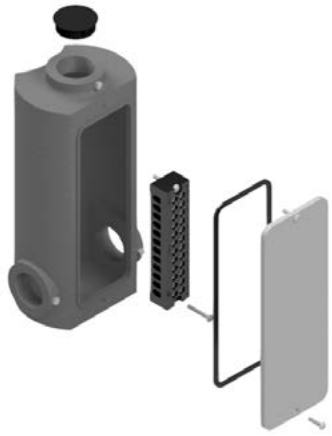

Terminal Compartment Assy, 2-Way Saddleback w/ Cable Guide & Mounting Holes, Iron

SE-3330 - [ ] Coating

GLV=Galvanized
P_ _=Paint

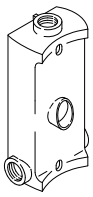

Rear View

Note: 1. All assemblies are supplied standard with stainless steel fasteners.
2. See Reference Section for available paint colors.

Aluminum Slip Fitter Assemblies, Cast Nipple

Pelco's Post Top Slip Fitters are available in aluminum, bronze, and iron, 1-1/2" NPS, Tri-Bolt or Tri-Stud. Post Top Terminal Compartments are available in aluminum or bronze and are supplied with a 12-circuit terminal strip or block.

SE-3054
Signal Closure Kit

Slip Fitter Assy, 1-Way for 2-7/8" OD Pole Cast Nipple

SE-3279 - [ ] Coating

PNC=Process No Color
P_ _=Paint

SE-3003
Signal Mounting Kit

Slip Fitter Assy, 1-Way Offset for 4-1/2" OD Pole Cast Nipple

SE-3310 - [ ] Coating

PNC=Process No Color
P_ _=Paint

SE-3003
Signal Mounting Kit

Slip Fitter Assy, 1-Way for 4-1/2" OD Pole Cast Nipple

SE-3311 - [ ] Coating

PNC=Process No Color
P_ _=Paint

SE-3003
Signal Mounting Kit

Slip Fitter Assy, 1-Way w/ 2-Way Side Ports for 4-1/2" OD Pole Cast Nipple

SE-3037 - [ ] Coating

PNC=Process No Color
P_ _=Paint

Note: 1. All assemblies supplied standard with stainless steel fasteners.
2. See Reference Section for available paint colors.

Aluminum Slip Fitter Assemblies

Pelco's Post Top Slip Fitters are available in aluminum, bronze, and iron, 1-1/2" NPS, Tri-Bolt or Tri-Stud. Post Top Terminal Compartments are available in aluminum or bronze and are supplied with a 12-circuit terminal strip or block. Designed to fit a 4-1/2" OD pole.

Slip Fitter Assy, 1-Way for 4-1/2" OD Pole Tri-Bolt & Cast Nipple

SE-3012 - [Signal Section] - [Coating]

Signal Section: 1=1 Sec, 2=2 Sec, 3=3 Sec, 4=4 Sec, 5=5 Sec

Coating: PNC=Process No Color, P_ _=Paint

Slip Fitter Assy, 2-Way Variable for 4-1/2" OD Pole Tri-Bolt & Cast Nipple

SE-3116 - [Signal Section] - [Coating]

Signal Section: 1=1 Sec, 2=2 Sec, 3=3 Sec, 4=4 Sec, 5=5 Sec

Coating: PNC=Process No Color, P_ _=Paint

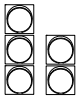

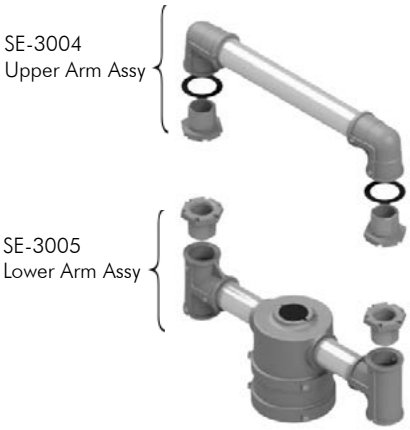

Slip Fitter Assy, 2-Way 16-1/2" CTC for 4-1/2" OD Pole Cast Nipple

SE-3089 - [Coating]

Coating: PNC=Process No Color, P_ _=Paint

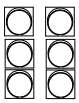

Note: 1. All assemblies are supplied standard with stainless steel slotted washer and fasteners.
2. See Reference Section for available paint colors.

ISO 9001 www.intlcert.com

Aluminum Slip Fitter Assemblies, Cast Nipple

Pelco's Post Top Slip Fitters are available in aluminum, bronze, and iron, 1-1/2" NPS, Tri-Bolt or Tri-Stud. Post Top Terminal Compartments are available in aluminum or bronze and are supplied with a 12-circuit terminal strip or block. Designed to fit a 4-1/2" OD pole.

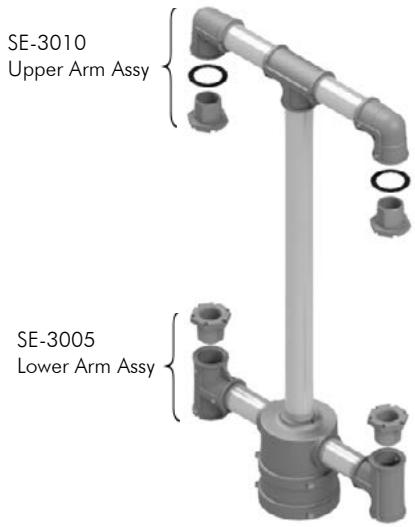

Slip Fitter Assy, 2-Way 16-1/2" CTC for 4-1/2" OD Pole, Cast Nipple

SE-3053 - [ ] - [ ]

Signal Section
1=1 Sec
2=2 Sec
3=3 Sec
4=4 Sec
5=5 Sec

Coating
PNC=Process No Color
P_ _=Paint

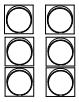

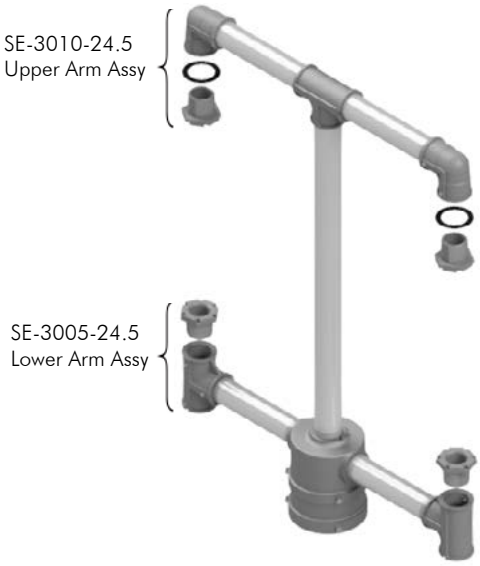

Slip Fitter Assy, 2-Way ICC Ped 24-1/2" CTC for 4-1/2" OD Pole, Cast Nipple

SE-3257 - [ ]

Coating
PNC=Process No Color
P_ _=Paint

Note: 1. All assemblies are supplied standard with stainless steel slotted washer and fasteners.
2. See Reference Section for available paint colors.

Aluminum Slip Fitter Assemblies, Tri-Stud

Pelco's Post Top Slip Fitters are available in aluminum, bronze, and iron, 1-1/2" NPS, Tri-Bolt or Tri-Stud. Post Top Terminal Compartments are available in aluminum or bronze and are supplied with a 12-circuit terminal strip or block. Designed to fit a 4-1/2" OD pole.

Slip Fitter Assy, 1-Way for 4-1/2" OD Pole Tri-Stud

SE-5016 - ☐

Coating
PNC=Process No Color
P_ _=Paint

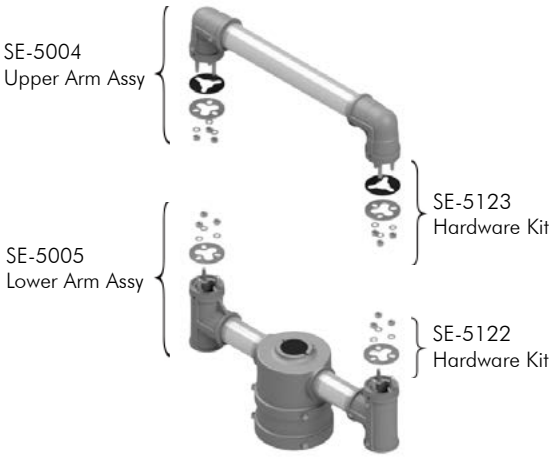

Slip Fitter Assy, 2-Way 16-1/2" CTC for 4-1/2" OD Pole Tri-Stud

SE-5006 - ☐

Coating
PNC=Process No Color
P_ _=Paint

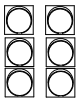

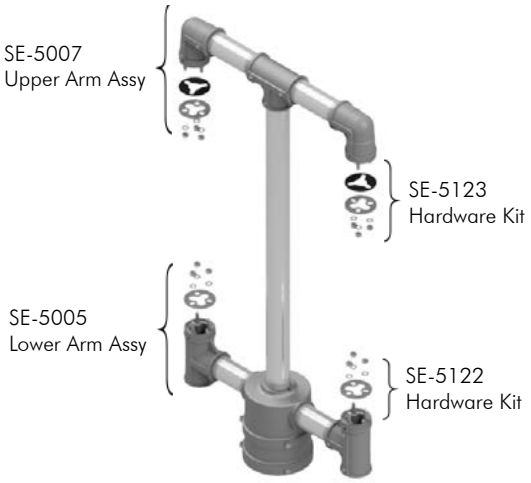

Slip Fitter Assy, 2-Way 16-1/2" CTC for 4-1/2" OD Pole Tri-Stud

SE-5008 - ☐ - ☐

Signal Section
1=1 Sec
2=2 Sec
3=3 Sec
4=4 Sec
5=5 Sec

Coating
PNC=Process No Color
P_ _=Paint

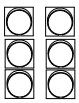

Note: 1. All assemblies are supplied standard with stainless steel slotted washer and fasteners.
2. See Reference Section for available paint colors.

ISO 9001
www.intlcert.com

Iron Slip Fitter Assemblies, Cast Nipple

Pelco's Post Top Slip Fitters are available in aluminum, bronze, and iron, 1-1/2" NPS, Tri-Bolt or Tri-Stud. Post Top Terminal Compartments are available in aluminum or bronze and are supplied with a 12-circuit terminal strip or block. Designed to fit a 4-1/2" OD pole.

Slip Fitter Assy, 1-Way w/ 2-Way Side Ports for 4-1/2" OD Pole Cast Nipple

SE-3177 - [ ] Coating

P__=Paint

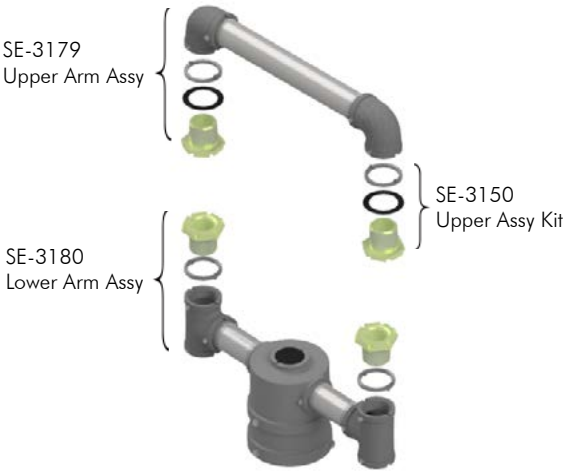

Slip Fitter Assy, 2-Way 16-1/2" CTC for 4-1/2" OD Pole Cast Nipple

SE-3181 - [ ] Coating

P__=Paint

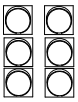

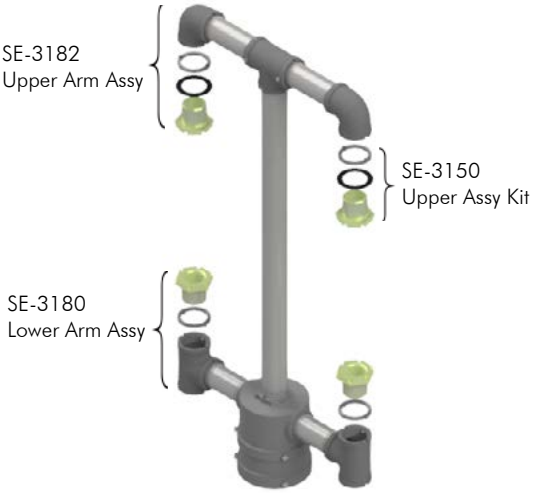

Slip Fitter Assy, 2-Way 16-1/2" CTC for 4-1/2" OD Pole Cast Nipple

SE-3183 - [ ] Signal Section - [ ] Coating

1=1 Sec
2=2 Sec
3=3 Sec
4=4 Sec
5=5 Sec

P__=Paint

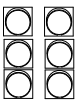

Note: 1. All assemblies are supplied standard with stainless steel fasteners.
2. See Reference Section for available paint colors.

This page is intentionally left blank.

Slip Fitters, Alum

Pelco's aluminum Post Top Slip Fitters are available in a one-way, offset one-way, or a two, three, or four-way configuration.

Slip Fitter, 1-Way for 4-1/2" OD Pole, Alum

SE-3106 - [ ] Coating

PNC=Process No Color
P_ _=Paint

Slip Fitter, 1-Way Offset for 4-1/2" OD Pole, Alum

SE-3107 - [ ] Coating

PNC=Process No Color
P_ _=Paint

Slip Fitter, 1 & 2-Way for 4-1/2" OD Pole, Alum

SE-3002 - [ ] Coating

PNC=Process No Color
P_ _=Paint

Slip Fitter, 3 & 4-Way for 4-1/2" OD Pole, Alum

SE-3029 - [ ] Coating

PNC=Process No Color
P_ _=Paint

Note: 1. All assemblies are supplied standard with stainless steel fasteners.
2. See Reference Section for available paint colors.

Slip Fitters, Iron

Pelco's iron Post Top Slip Fitters are available in a one, two, three, or four-way configuration.

Slip Fitter, 1-Way for 4-1/2" OD Pole, Iron Serrated Top Port

SE-4431 - [ ] Coating

PNC=Process No Color
P_ _=Paint

Slip Fitter, 1 & 2-Way for 4-1/2" OD Pole, Iron

SE-3175 - [ ] Coating

P_ _=Paint

Slip Fitter, 3 & 4-Way for 4-1/2" OD Pole, Iron

SE-3176 - [ ] Coating

P_ _=Paint

Note: 1. All assemblies are supplied standard with stainless steel fasteners.
2. See Reference Section for available paint colors.

Slip Fitters, Bronze

Bronze Post Top Slip Fitters are available in a one-way, offset one-way, or a two-way configuration. Pelco's bronze slip fitters are cast with top port serrations which eliminates the need for a lockring.

Slip Fitter, 1-Way for 4-1/2" OD Pole, Bronze Serrated Top Port

SE-4424 - [ ] Coating

PNC=Process No Color
P_ _=Paint

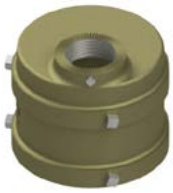

Slip Fitter, 1-Way Offset for 4-1/2" OD Pole, Bronze Serrated Top Port

SE-4425 - [ ] Coating

PNC=Process No Color
P_ _=Paint

Slip Fitter, 1 & 2-Way for 4-1/2" OD Pole, Bronze Serrated Top Port

SE-4423 - [ ] Coating

PNC=Process No Color
P_ _=Paint

Note: 1. All assemblies are supplied standard with stainless steel fasteners.
2. See Reference Section for available paint colors.

Aluminum Terminal Compartment Assemblies

Pelco's Post Top Slip Fitters are available in aluminum, bronze, and iron, 1-1/2" NPS, Tri-Bolt or Tri-Stud. Post Top Terminal Compartments are available in aluminum or bronze and are supplied with a 12-circuit terminal strip or block. Designed to fit a 4-1/2" OD pole.

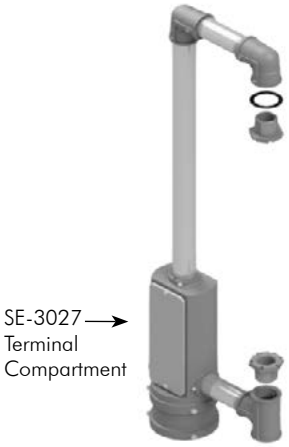

Terminal Compartment Assy, 1-Way, Alum for 4-1/2" OD Pole Cast Nipple

SE-3270 - [Signal Section] - [Coating]

Signal Section: 1=1 Sec, 2=2 Sec, 3=3 Sec, 4=4 Sec, 5=5 Sec

Coating: PNC=Process No Color, P_ _=Paint

Terminal Compartment Assy, 1-Way ICC Ped, Alum for 4-1/2" OD Pole Cast Nipple

SE-3271 - [Coating]

Coating: PNC=Process No Color, P_ _=Paint

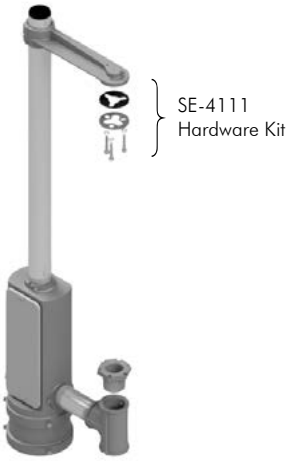

Terminal Compartment Assy, 1-Way, Alum for 4-1/2" OD Pole Tri-Bolt & Cast Nipple

SE-3013 - [Signal Section] - [Coating]

Signal Section: 1=1 Sec, 2=2 Sec, 3=3 Sec, 4=4 Sec, 5=5 Sec

Coating: PNC=Process No Color, P_ _=Paint

Note: 1. All assemblies are supplied standard with stainless steel slotted washer and fasteners.
2. See Reference Section for available paint colors.

Aluminum Terminal Compartment Assemblies

Pelco's Post Top Slip Fitters are available in aluminum, bronze, and iron, 1-1/2" NPS, Tri-Bolt or Tri-Stud. Post Top Terminal Compartments are available in aluminum or bronze and are supplied with a 12-circuit terminal strip or block. Designed to fit a 4-1/2" OD pole.

SE-3010
Upper Arm Assy

SE-3011
Lower Arm Assy

Terminal Compartment Assy, 2-Way, Alum 16-1/2" CTC for 4-1/2" OD Pole Cast Nipple

SE-3048 - [ ] - [ ]

Signal Section
1=1 Sec
2=2 Sec
3=3 Sec
4=4 Sec
5=5 Sec

Coating
PNC=Process No Color
P_ _=Paint

SE-5007
Upper Arm Assy

SE-5122
Hardware Kit

Terminal Compartment Assy, 2-Way, Alum 16-1/2" CTC for 4-1/2" OD Pole Tri-Stud

SE-5187 - [ ] - [ ]

Signal Section
1=1 Sec
2=2 Sec
3=3 Sec
4=4 Sec
5=5 Sec

Coating
PNC=Process No Color
P_ _=Paint

SE-3004
Upper Arm Assy

Terminal Compartment Assy, 2-Way, Alum 24" CTC for 4-1/2" OD Pole Cast Nipple

SE-3141 - [ ]

Coating
PNC=Process No Color
P_ _=Paint

Note: 1. All assemblies are supplied standard with stainless steel slotted washer and fasteners.
2. See Reference Section for available paint colors.

Terminal Compartments Aluminum

Pelco's aluminum Post Top Terminal Compartments are available in a 2-way or 3-way configuration. Each are supplied standard with a 12-circuit terminal strip and an ABS plastic door.

Terminal Compartment Assy, Vertical 2-Way Post Top for 4-1/2" OD Pole, Alum

SE-3027 - [ ] Coating

PNC=Process No Color
P_ _=Paint

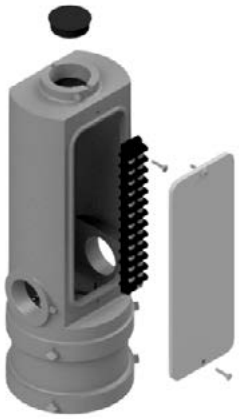

Terminal Compartment Assy, Vertical 3-Way Post Top for 4-1/2" OD Pole, Alum

SE-3074 - [ ] Coating

PNC=Process No Color
P_ _=Paint

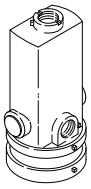

Rear Port

Note: 1. All assemblies are supplied standard with stainless steel fasteners.
2. See Reference Section for available paint colors.

Terminal Compartments Aluminum

Pelco's 2-way Horizontal Terminal Compartments are cast aluminum supplied with ABS plastic doors. Each can be configured with either a top port or a rear port and are supplied with one or two 12-circuit terminal strips.

Terminal Compartment Assy, Horizontal 2-Way Post Top for 4-1/2" OD Pole, Alum

		Port Mountings		Terminal Strip		Coating
SE-3143	-	☐	-	☐	-	☐
		TP=Top Port RP=Rear Port		1T=Terminal Strip (1) 2T=Terminal Strips (2)		PNC=Process No Color P_ _=Paint

SE-3042
Upper Assy Kit

Terminal Compartment Assy, Horizontal 2-Way Post Top for 4-1/2" OD Pole, Alum Cast Nipples

		Port Mountings		Terminal Strip		Coating
SE-3135	-	☐	-	☐	-	☐
		TP=Top Port RP=Rear Port		1T=Terminal Strip (1) 2T=Terminal Strips (2)		PNC=Process No Color P_ _=Paint

Note: 1. All assemblies are supplied standard with stainless steel fasteners.
2. See Reference Section for available paint colors.

Terminal Compartments
Bronze & Iron

Pelco's bronze and iron Post Top Terminal Compartments are available in a 2-way configuration. Each are supplied standard with a 12-circuit terminal block and an ABS plastic door.

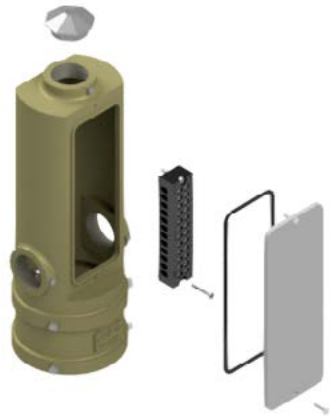

Terminal Compartment Assy, Vertical 2-Way Post Top for 4-1/2" OD Pole, Bronze

SE-4422 - ☐ Coating

PNC=Process No Color
P_ _=Paint

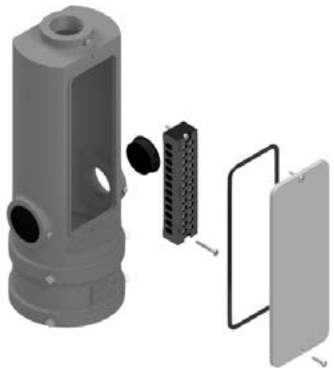

Terminal Compartment Assy, Vertical 2-Way Post Top for 4-1/2" OD Pole, Iron

SE-3331 - ☐ Coating

GLV=Galvanized
P_ _=Paint

Note: 1. All assemblies are supplied standard with stainless steel fasteners.
2. See Reference Section for available wet paint colors.

Slip Fitter Assemblies
Black Nylon

Pelco's Nylon Slip Fitters are available in 1-way through 4-way configurations. The arms have both upper and lower serrations to lock securely onto the signal without the use of a lockring.

Multi-Fitter Assembly w/ Signal Arm & Cap, for 4-1/2" OD Pole
Black Nylon

	Arm Assembly		Coating
SE-3285 -	☐	-	☐
	1=1-Way 2=2-Way 3=3-Way 4=4-Way		PNC=Process No Color P _ _=Paint

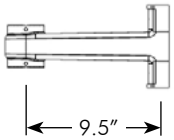

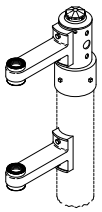

1-Way Option

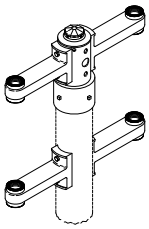

2-Way Option

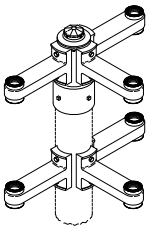

3-Way Option

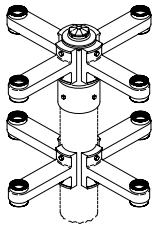

4-Way Option

Note: 1. All assemblies are supplied standard with stainless steel fasteners.
2. See Reference Section for available wet paint colors.

Plumbizers
Aluminum

Pelco's aluminum Plumbizers, available in both straight and offset configuations, are designed to mount traffic signal assemblies to the end of a mast arm. Provided with hardware for mounting onto a 2-3/8" diameter tenon.

Straight Plumbizer Assy, Alum w/ Hardware

SE-0352 - [ ] Coating

PNC=Process No Color
P__=Paint

Offset Plumbizer Assy, Alum w/ Hardware

SE-0353 - [ ] Coating

PNC=Process No Color
P__=Paint

Offset Plumbizer Assy, Alum Large Hole w/ Hardware

SE-4018 - [ ] Coating

PNC=Process No Color
P__=Paint

Note: 1. All assemblies are supplied standard with stainless steel fasteners.
2. See Reference Section for available paint colors.

Plumbizers
Bronze & Iron

Pelco's bronze and iron offset Plumbizers are designed to mount traffic signal assemblies on the end of a mast arm. Provided with hardware for mounting onto a 2-3/8" diameter tenon.

Offset Plumbizer Assy, Bronze w/ Hardware

SE-4413 - [ ] Coating

PNC=Process No Color
P_ _=Paint

Offset Plumbizer Assy, Bronze Large Hole w/ Hardware

SE-4243 - [ ] Coating

PNC=Process No Color
P_ _=Paint

Offset Plumbizer Assy, Iron Large Hole w/ Hardware

SE-4435 - [ ] Coating

PNC=Process No Color
P_ _=Paint

Note: 1. All assemblies are supplied standard with stainless steel slotted washers and fasteners, with galvanized hardware on outlet body. Stainless upgrade shall include stainless steel hardware and pins.
3. See Reference Section for available paint colors.

Mast Arm Hangers Aluminum

Pelco's aluminum Mast Arm Hangers are designed to mount traffic signal assemblies on the end of a mast arm. Available in both 1-1/2" and tri-stud. Provided with hardware for mounting to a 2-3/8" diameter tenon.

Rigid Mast Arm Hanger, Alum 1-1/2" NPS w/ Hardware

SE-0350 - [Double Set Screws] - [Coating]

Double Set Screws: Blank=None, DS=Double Set Screws

Coating: PNC=Process No Color, P_ _=Paint

Rigid Mast Arm Hanger, Alum Cast Nipple

SE-3056 - [Coating]

Coating: PNC=Process No Color, P_ _=Paint

Rigid Mast Arm Hanger, Alum Tri-Stud

SE-3119 - [Coating]

Coating: PNC=Process No Color, P_ _=Paint

Note: 1. All assemblies are supplied standard with stainless steel fasteners.
2. See Reference Section for available paint colors.

Mast Arm Hangers
Aluminum

Pelco's aluminum Mast Arm Hanger are for mounting traffic signal assemblies on the end of a mast arm. Free-swinging styles are available with a cast nipple or all thread. Provided with hardware for mounting to a 2-3/8" diameter tenon.

Free-Swinging Mast Arm Hanger, Alum 1-1/2" NPS w/ Hardware

SE-3103 - [Insulator Bushing] - [Stainless Bushing] - [Coating]

- Insulator Bushing: Blank=None; IB=Insulator Bushing
- Stainless Bushing: Blank=None; SB=Stainless
- Coating: PNC=Process No Color; P_ _=Paint

Free-Swinging Mast Arm Hanger Assy, Alum w/ Outlet Body & Cast Nipple

SE-3201 - [Stainless Bushing] - [Stainless Upgrade] - [Coating]

- Stainless Bushing: Blank=None; SB=Stainless Bushing
- Stainless Upgrade: Blank=None; SB=Stainless
- Coating: PNC=Process No Color; P_ _=Paint

Free-Swinging Mast Arm Hanger Assy, Alum w/ Outlet Body & All Thread Nipple

SE-3314 - [Stainless Bushing] - [Stainless Upgrade] - [Coating]

- Stainless Bushing: Blank=None; SB=Stainless Bushing
- Stainless Upgrade: Blank=None; SB=Stainless
- Coating: PNC=Process No Color; P_ _=Paint

Note: 1. All assemblies are supplied standard with stainless steel slotted washers and fasteners, with galvanized hardware on outlet body. Stainless upgrade shall include stainless steel hardware and pins.
3. See Reference Section for available paint colors.

Mast Arm Hangers
Bronze

Pelco's bronze Mast Arm Hanger, for mounting traffic signal assemblies on the end of a mast arm, is designed with serrations for locking onto the top of a signal. Provided with hardware for mounting to a 2-3/8" diameter tenon.

Ell Assy, Rigid Tenon Mount, Bronze 1-1/2" NPS w/ Hardware

SE-4412 - [ ] Coating

PNC=Process No Color
P_ _=Paint

Note: 1. All assemblies are supplied standard with stainless steel fasteners.
2. See Reference Section for available paint colors.

Astro Sign-Brac Overhead Street Name Signs Cable Mount

Pelco manufactures a variety of sign brackets in rigid and free-swinging mounts for both flat and internally illuminated signs. Most sign-bracs are available with a cable, band, or tenon mount clamp kit.

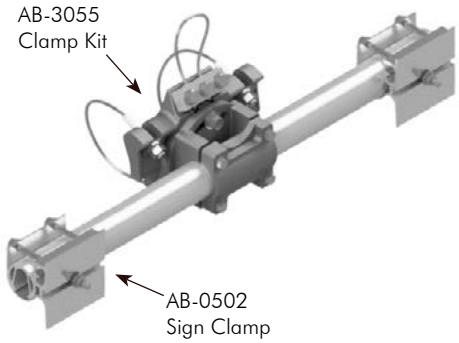

Astro Sign-Brac, Galaxy Cable Mount for Overhead Street Name Signs

	CTC		Cable Length		Cable		Coating
AG-0144	- [ ]	-	[ ]	-	[ ]	-	[ ]
	*See Chart		See Note		Blank=Galv SS=Stainless		PNC=Process No Color P_ _=Paint

Note:
Cable Length: 62", 84", 96", 110", 120", 132", 144", 220", or 280".

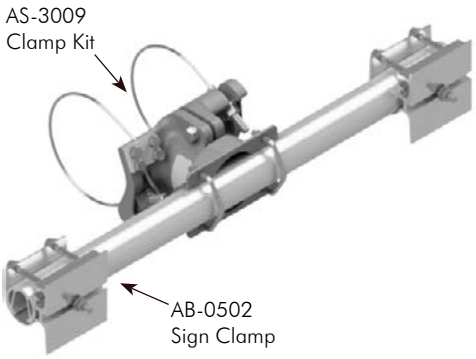

Astro Sign-Brac, Stellar Cable Mount for Overhead Street Name Signs

	CTC		Cable Length		Cable		Coating
AS-0144	- [ ]	-	[ ]	-	[ ]	-	[ ]
	*See Chart		See Note		Blank=Galv SS=Stainless		PNC=Process No Color P_ _=Paint

Note:
Cable Length: 62", 84", 96", 110", 120", 132", 144", 220", or 280".

2 Sign Clamps				
Sign:	18"	24"	30"	36"
Max CTC:	12"	18"	24"	30"

4 Sign Clamps										
Sign:	42"	48"	54"	60"	66"	72"	78"	84"	90"	96"
Max CTC:	36"	42"	48"	54"	60"	66"	72"	78"	84"	90"

6 Sign Clamps			
Sign:	102"	108"	114"
Max CTC:	96"	102"	108"

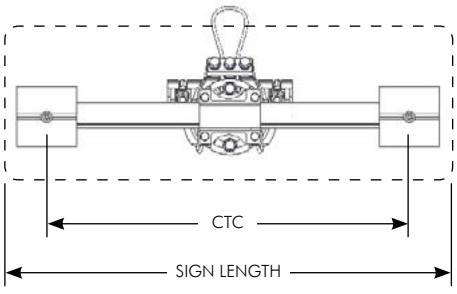

Notes:

130 mph wind zone maximum: 16 sq-ft
150 mph wind zone maximum: 12 sq-ft

1. Capacities listed are only for applications with the clamp kit mounted in the center of the sign.
2. Signs must be properly engineered for specific application.
3. Tube length is 4" longer than maximum CTC.

Note: 1. All assemblies are supplied standard with stainless fasteners. Stainless upgrade shall include stainless steel cable.
2. See Reference Section for clamp kit pole diameters.
3. See Reference Section for available paint colors.

Astro Sign-Brac
Overhead Street Name Signs
Band and Tenon Mount

Pelco manufactures a variety of sign brackets in rigid and free-swinging mounts for both flat and internally illuminated signs. Most sign-bracs are available with a cable, band, or tenon mount clamp kit.

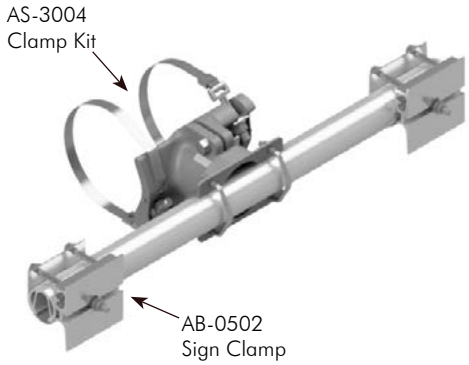

Astro Sign-Brac, Stellar Band Mount for Overhead Street Name Signs

	CTC		Band Length		Clamp Screw		Coating
AS-0128	- [ ]	-	[ ]	-	[ ]	-	[ ]
	*See Chart		See Note		Blank=Galv SS=Stainless		PNC=Process No Color P_ _=Paint

Note:
Band Length: 29″, 36″, 42″, 48″, 56″, 72″, 84″, 96″, or 114″.

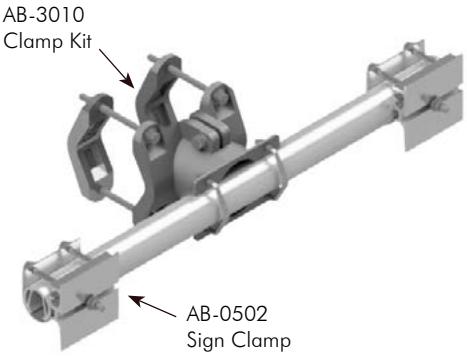

Astro Sign-Brac, Stellar Tenon Mount for Overhead Street Name Signs

	CTC		Coating
AS-0662	- [ ]	-	[ ]
	*See Chart		PNC=Process No Color P_ _=Paint

Note:
Fits 1.9″ to 4.5″ diameter.

2 Sign Clamps				
Sign:	18″	24″	30″	36″
Max CTC:	12″	18″	24″	30″

4 Sign Clamps										
Sign:	42″	48″	54″	60″	66″	72″	78″	84″	90″	96″
Max CTC:	36″	42″	48″	54″	60″	66″	72″	78″	84″	90″

6 Sign Clamps			
Sign:	102″	108″	114″
Max CTC:	96″	102″	108″

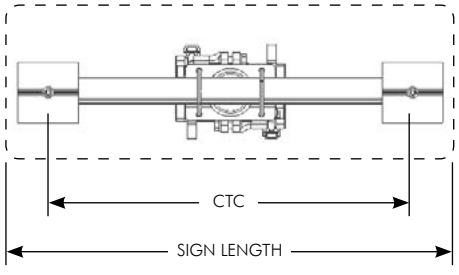

Notes:

130 mph wind zone maximum: 16 sq-ft
150 mph wind zone maximum: 12 sq-ft

1. Capacities listed are only for applications with the clamp kit mounted in the center of the sign.
2. Signs must be properly engineered for specific application.
3. Tube length is 4″ longer than maximum CTC.

Note: 1. All assemblies are supplied standard with stainless fasteners. Stainless upgrade shall include stainless steel clamp screws.
2. See Reference Section for clamp kit pole diameters.
3. See Reference Section for available paint colors.

Astro Sign-Brac Overhead Street Name Signs w/ Signal Mount

Pelco manufactures a variety of sign brackets in rigid and free-swinging mounts for both flat and internally illuminated signs. Most sign-bracs are available with a cable, band, or tenon mount clamp kit.

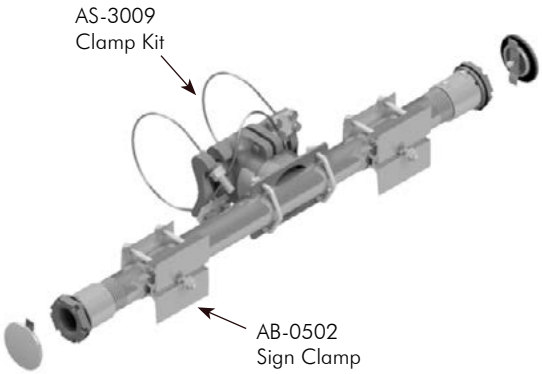

Astro-Brac Assy, Stellar Cable Mount for Sign w/ Signals

	CTC	Cable Length	Cable	Coating
AS-0196 -	[ ] -	[ ] -	[ ] -	[ ]
	*See Chart	See Note	Blank=Galv SS=Stainless	PNC=Process No Color P_ _=Paint

Note:
Cable Length: 62", 84", 96", 110", 120", 132", 144", 220", or 280".

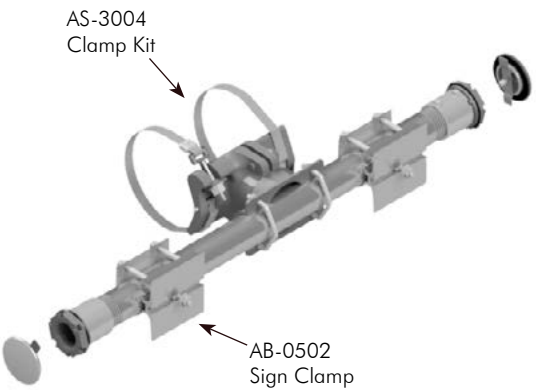

Astro-Brac Assy, Stellar Band Mount for Sign w/ Signals

	CTC	Band Length	Clamp Screw	Coating
AS-0195 -	[ ] -	[ ] -	[ ] -	[ ]
	*See Chart	See Note	Blank=Galv SS=Stainless	PNC=Process No Color P_ _=Paint

Note:
Band Length: 29", 36", 42", 48", 56", 72", 84", 96", or 114".

Max CTC:	24"	30"	36"	42"	48"	54"	60"
Tube Length:	46"	52"	58"	64"	70"	76"	82"

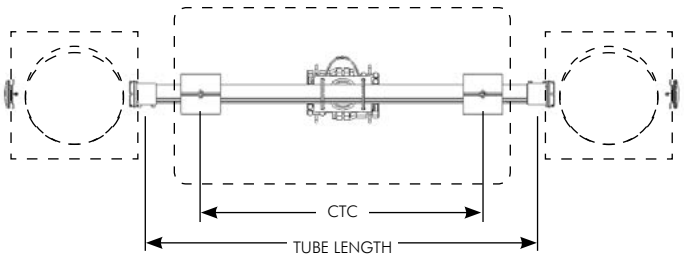

Notes:

130 mph wind zone maximum: 16 sq-ft
150 mph wind zone maximum: 12 sq-ft

1. Capacities listed are only for applications with the clamp kit mounted in the center of the sign.
2. Signs must be properly engineered for specific application.
3. Tube length is 4" longer than maximum CTC.

Note: 1. All assemblies are supplied standard with stainless fasteners. Stainless upgrade shall include stainless steel clamp screws or cable.
2. See Reference Section for clamp kit pole diameters.
3. See Reference Section for available paint colors.

This page is intentionally left blank.

Astro Sign-Brac Formed Tubes Cable Mount

Pelco manufactures a variety of sign brackets in rigid and free-swinging mounts for both flat and internally illuminated signs. Most sign-bracs are available with a cable, band, or tenon mount clamp kit.

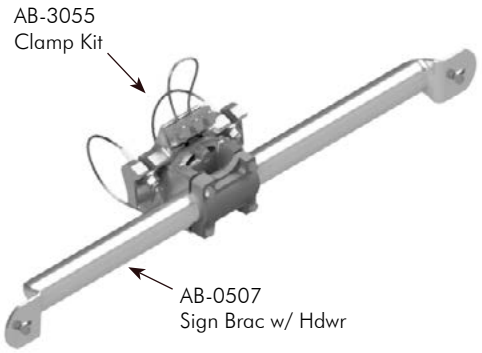

Astro Sign-Brac, Galaxy Cable Mount, Formed Tube

		CTC		Cable Length		Cable		Coating
AG-0142	-		-		-		-	
		*See Chart		See Note		Blank=Galv SS=Stainless		PNC=Process No Color P_ _=Paint

Note:
Cable Length: 62", 84", 96", 110", 120", 132", 144", 220", or 280".

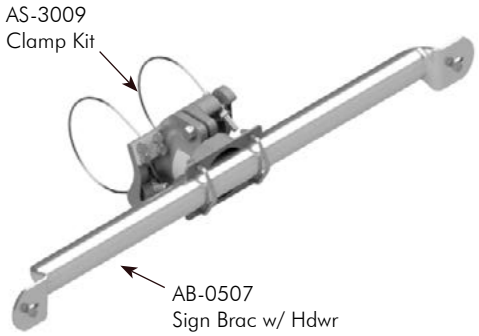

Astro Sign-Brac, Stellar Cable Mount, Formed Tube

		CTC		Cable Length		Cable		Coating
AS-0142	-		-		-		-	
		*See Chart		See Note		Blank=Galv SS=Stainless		PNC=Process No Color P_ _=Paint

Note:
Cable Length: 62", 84", 96", 110", 120", 132", 144", 220", or 280".

Max CTC:	9"	12"	15"	18"	24"	30"	36"	42"	48"	60"
Sign Length:	15"	18"	21"	24"	30"	36"	42"	48"	54"	66"

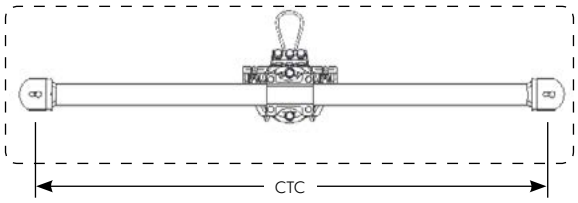

Notes:

90 mph wind zone maximum: 16 sq-ft

1. Capacity listed is only for applications with the clamp kit mounted in the center of the sign.
2. Signs must be properly engineered for specific application.
3. For higher wind zones and multiple brackets use assemblies shown on T6-1 & T6-2.

Note: 1. All assemblies are supplied standard with stainless fasteners. Stainless upgrade shall include stainless steel cable.
2. See Reference Section for clamp kit pole diameters.
3. See Reference Section for available paint colors.

Astro Sign-Brac Formed Tubes
Band & Tenon Mount

Pelco manufactures a variety of sign brackets in rigid and free-swinging mounts for both flat and internally illuminated signs. Most sign-bracs are available with a cable, band, or tenon mount clamp kit.

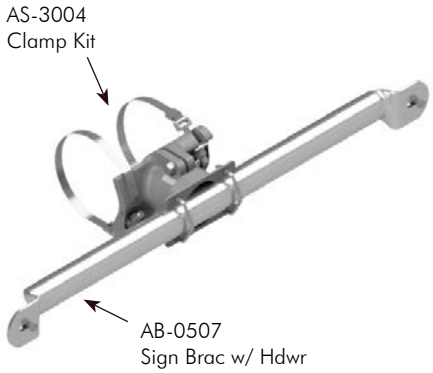

Astro Sign-Brac, Stellar Band Mount, Formed Tube

AS-0105 - [CTC] - [Band Length] - [Clamp Screw] - [Coating]

CTC	Band Length	Clamp Screw	Coating
*See Chart	See Note	Blank=Galv SS=Stainless	PNC=Process No Color P_ _=Paint

Note:
Band Length: 29", 36", 42", 48", 56", 72", 84", 96", or 114".

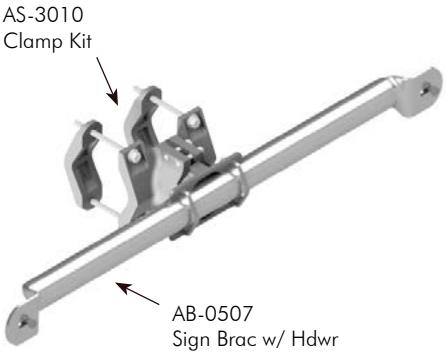

Astro Sign-Brac, Stellar Tenon Mount, Formed Tube

AS-0179 - [CTC] - [Coating]

CTC	Coating
*See Chart	PNC=Process No Color P_ _=Paint

Note:
Fits 1.9" to 4.5" diameter.

Max CTC:	9"	12"	15"	18"	24"	30"	36"	42"	48"	60"
Sign Length:	15"	18"	21"	24"	30"	36"	42"	48"	54"	66"

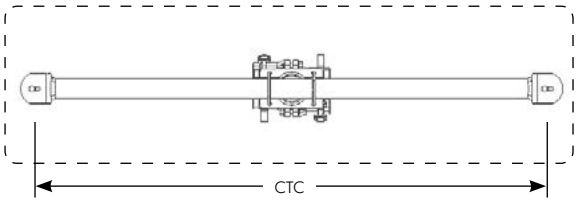

Notes:

90 mph wind zone maximum: 16 sq-ft

1. Capacity listed is only for applications with the clamp kit mounted in the center of the sign.
2. For higher wind zones and multiple brackets use assemblies shown on T6-1 & T6-2.
3. Signs must be properly engineered for specific application.

Note: 1. All assemblies are supplied standard with stainless fasteners. Stainless upgrade shall include stainless steel clamp screws.
2. See Reference Section for clamp kit pole diameters.
3. See Reference Section for available paint colors.

Astro Sign-Brac Formed Tubes
Atlas Articulated Mounts

Pelco manufactures a variety of sign brackets in rigid and free-swinging mounts for both flat and internally illuminated signs. Most sign-bracs are available with a cable, band, or tenon mount clamp kit.

AB-3026
Clamp Kit

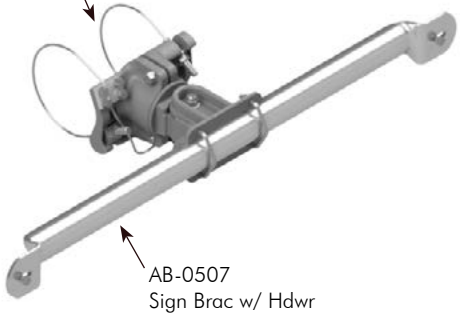

AB-0507
Sign Brac w/ Hdwr

Astro Sign-Brac, Atlas Articulating Cable Mount, Formed Tube

		CTC		Cable Length		Cable		Coating
AS-0136	-		-		-		-	
		*See Chart		See Note		Blank=Galv SS=Stainless		PNC=Process No Color P_ _=Paint

Note:
Cable Length: 62", 84", 96", 110", 120", 132", 144", 220", or 280".

AS-3029
Clamp Kit

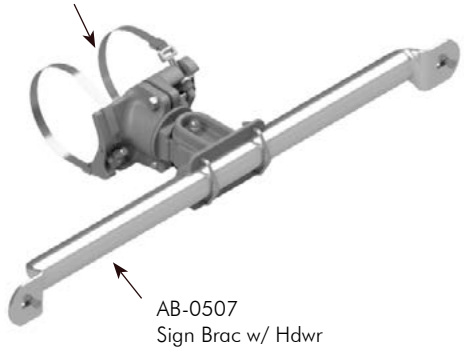

AB-0507
Sign Brac w/ Hdwr

Astro Sign-Brac, Atlas Articulating Band Mount, Formed Tube

		CTC		Band Length		Clamp Screw		Coating
AS-0135	-		-		-		-	
		*See Chart		See Note		Blank=Galv SS=Stainless		PNC=Process No Color P_ _=Paint

Note:
Band Length: 29", 36", 42", 48", 56", 72", 84", 96", or 114".

Max CTC:	9"	12"	15"	18"	24"	30"	36"	42"	48"	60"
Sign Length:	15"	18"	21"	24"	30"	36"	42"	48"	54"	66"

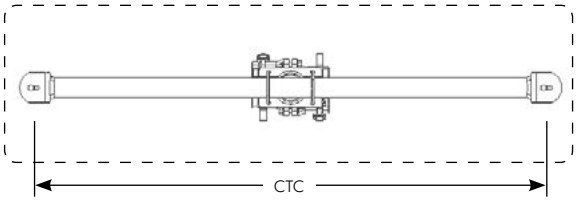

Notes:

90 mph wind zone maximum: 16 sq-ft

1. Capacity listed is only for applications with the clamp kit mounted in the center of the sign.
2. For higher wind zones and multiple brackets use assemblies shown on T6-1 & T6-2.
3. Signs must be properly engineered for specific application.

Note: 1. All assemblies are supplied standard with stainless fasteners. Stainless upgrade shall include stainless steel clamp screws or cable.
2. See Reference Section for clamp kit pole diameters.
3. See Reference Section for available paint colors.

Astro Sign-Brac Formed Tubes Vertical Extension Mounts

Pelco manufactures a variety of sign brackets in rigid and free-swinging mounts for both flat and internally illuminated signs. Most sign-bracs are available with a cable, band, or tenon mount clamp kit.

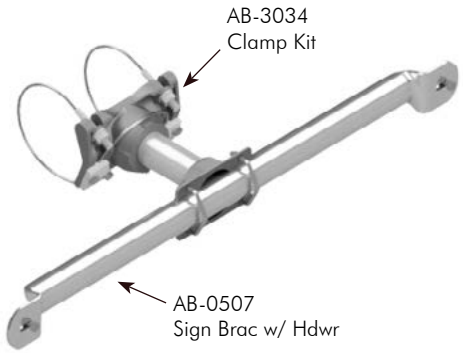

Astro Sign-Brac, Vertical Extension Cable Mount, Formed Tube

	Nipple Length		CTC		Cable Length		Cable		Coating
AB-0189	- [ ]	-	[ ]	-	[ ]	-	[ ]	-	[ ]
	5=5″ Nipple 6=6″ Nipple 8=8″ Nipple		*See Chart		See Note		Blank=Galv SS=Stainless		PNC=Process No Color P_ _=Paint

Note:
Cable Length: 62″, 84″, 96″, 110″, 120″, 132″, 144″, 220″, or 280″.

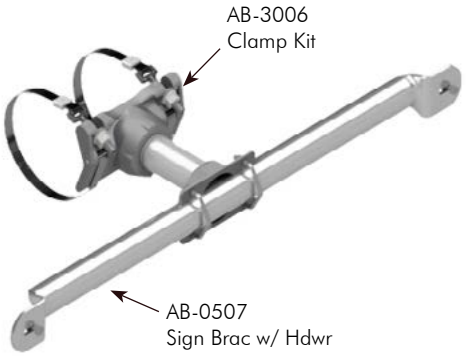

Astro Sign-Brac, Vertical Extension Band Mount, Formed Tube

	Nipple Length		CTC		Band Length		Clamp Screw		Coating
AB-0134	- [ ]	-	[ ]	-	[ ]	-	[ ]	-	[ ]
	5=5″ Nipple 6=6″ Nipple 8=8″ Nipple		*See Chart		See Note		Blank=Galv SS=Stainless		PNC=Process No Color P_ _=Paint

Note:
Band Length: 29″, 36″, 42″, 48″, 56″, 72″, 84″, 96″, or 114″.

Max CTC:	9″	12″	15″	18″	24″	30″	36″	42″	48″	60″
Sign Length:	15″	18″	21″	24″	30″	36″	42″	48″	54″	66″

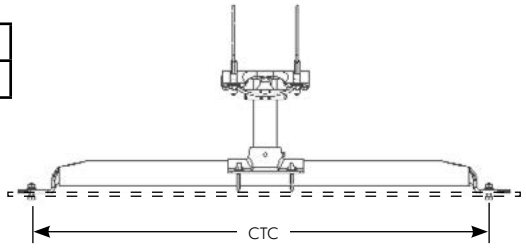

Notes:

90 mph wind zone maximum: 16 sq-ft

1. Capacity listed is only for applications with the clamp kit mounted in the center of the sign.
2. For higher wind zones and multiple brackets use assemblies shown on T6-1 & T6-2.
3. Signs must be properly engineered for specific application.

Note: 1. All assemblies are supplied standard with stainless fasteners. Stainless upgrade shall include stainless steel clamp screws or cable.
2. See Reference Section for clamp kit pole diameters.
3. See Reference Section for available paint colors.

Astro Sign-Brac Electrical Type Stellar Series

Pelco manufactures a variety of sign brackets in rigid and free-swinging mounts for both flat and internally illuminated signs. Most sign-bracs are available with a cable, band, or tenon mount clamp kit.

Astro Sign-Brac, Stellar Cable Mount, Back Attachment for Internally Illuminated Signs

	Tube Length		Cable Length		Cable		Coating
AS-0650	-	☐	-	☐	-	☐	- ☐
	23=23″ Tube 37=37″ Tube 46=46″ Tube 58=58″ Tube 74=74″ Tube		See Note		Blank=Galv SS=Stainless		PNC=Process No Color P_ _=Paint

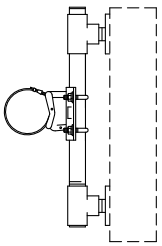

Note:
Cable Length: 62″, 84″, 96″, 110″, 120″, 132″, 144″, 220″, or 280″.

Astro Sign-Brac, Stellar Band Mount, Back Attachment for Internally Illuminated Signs

	Tube Length		Band Length		Clamp Screw		Coating
AS-0104	-	☐	-	☐	-	☐	- ☐
	23=23″ Tube 37=37″ Tube 46=46″ Tube 58=58″ Tube 74=74″ Tube		See Note		Blank=Galv SS=Stainless		PNC=Process No Color P_ _=Paint

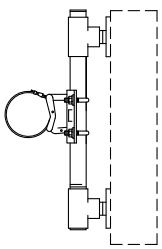

Note:
Band Length: 29″, 36″, 42″, 48″, 56″, 72″, 84″, 96″, or 114″.

Note: 1. All assemblies are supplied standard with stainless fasteners. Stainless upgrade shall include stainless steel clamp screws or cable.
2. See Reference Section for clamp kit pole diameters.
3. See Reference Section for available paint colors.

Astro Sign-Brac Electrical Type Stellar Series

Pelco manufactures a variety of sign brackets in rigid and free-swinging mounts for both flat and internally illuminated signs. Most sign-bracs are available with a cable, band, or tenon mount clamp kit.

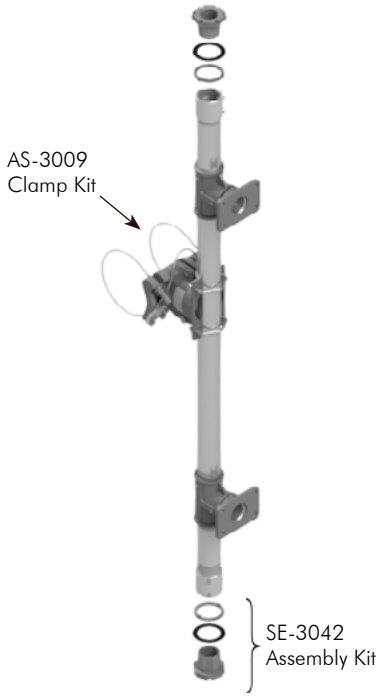

Astro Sign-Brac, Stellar Band Mount, Back Attachment for Internally Illuminated Signs and Signals

	Tube Length	Cable Length	Cable	Coating
AS-0107 -	☐	- ☐	- ☐	- ☐
	23=23″ Tube 37=37″ Tube 46=46″ Tube 58=58″ Tube 74=74″ Tube	See Note	Blank=Galv SS=Stainless	PNC=Process No Color P__=Paint

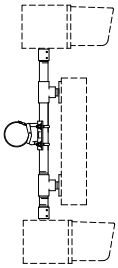

Note:
Cable Length: 62″, 84″, 96″, 110″, 120″, 132″, 144″, 220″, or 280″.

Astro Sign-Brac, Stellar Cable Mount, Back Attachment for Internally Illuminated Signs and Signals

	Tube Length	Band Length	Clamp Screw	Coating
AS-0651 -	☐	- ☐	- ☐	- ☐
	23=23″ Tube 37=37″ Tube 46=46″ Tube 58=58″ Tube 74=74″ Tube	See Note	Blank=Galv SS=Stainless	PNC=Process No Color P__=Paint

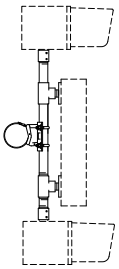

Note:
Band Length: 29″, 36″, 42″, 48″, 56″, 72″, 84″, 96″, or 114″.

Note: 1. All assemblies are supplied standard with stainless fasteners. Stainless upgrade shall include stainless steel clamp screws or cable.
2. See Reference Section for clamp kit pole diameters.
3. See Reference Section for available paint colors.

ISO 9001 www.intlcert.com

Astro Sign-Brac Electrical Type Cable Mount

Pelco manufactures a variety of sign brackets in rigid and free-swinging mounts for both flat and internally illuminated signs. Most sign-bracs are available with a cable, band, or tenon mount clamp kit.

Astro Sign-Brac, Galaxy Cable Mount Top & Bottom Attachment for Internally Illuminated Signs

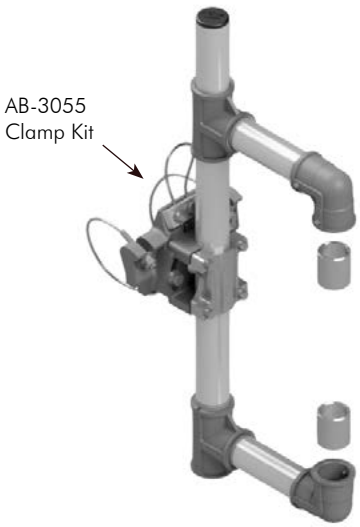

AG-0652 - [Tube Length] - [Cable Length] - [Cable] - [Coating]

Tube Length	Cable Length	Cable	Coating
23=23″ Tube 37=37″ Tube 46=46″ Tube 58=58″ Tube 74=74″ Tube	See Note	Blank=Galv SS=Stainless	PNC=Process No Color P_ _=Paint

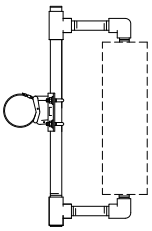

Note:
Cable Length: 62″, 84″, 96″, 110″, 120″, 132″, 144″, 220″, or 280″.

Astro Sign-Brac, Stellar Cable Mount Top & Bottom Attachment for Internally Illuminated Signs

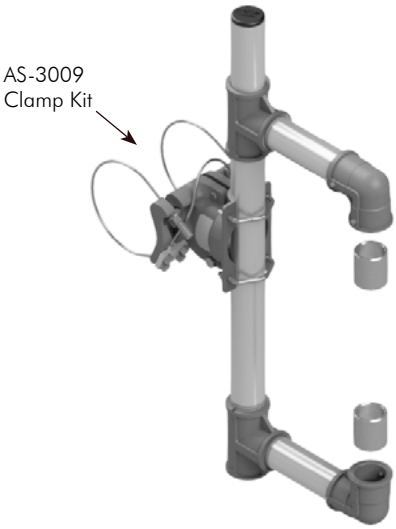

AS-0652 - [Tube Length] - [Cable Length] - [Cable] - [Coating]

Tube Length	Cable Length	Cable	Coating
23=23″ Tube 37=37″ Tube 46=46″ Tube 58=58″ Tube 74=74″ Tube	See Note	Blank=Galv SS=Stainless	PNC=Process No Color P_ _=Paint

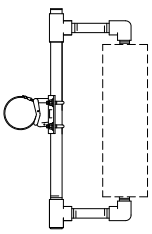

Note:
Cable Length: 62″, 84″, 96″, 110″, 120″, 132″, 144″, 220″, or 280″.

Note: 1. All assemblies are supplied standard with stainless fasteners. Stainless upgrade shall include stainless steel cable.
2. See Reference Section for clamp kit pole diameters.
3. See Reference Section for available paint colors.

Astro Sign-Brac Electrical Type Band Mount

Pelco manufactures a variety of sign brackets in rigid and free-swinging mounts for both flat and internally illuminated signs. Most sign-bracs are available with a cable, band, or tenon mount clamp kit.

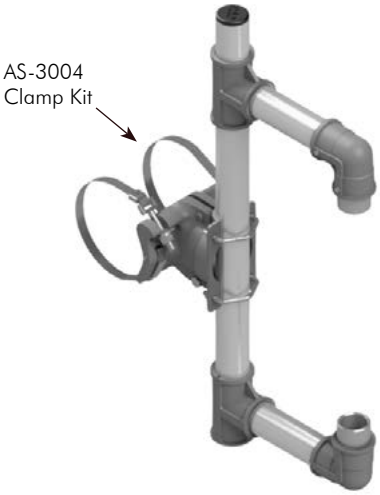

Astro Sign-Brac, Stellar Band Mount Top & Bottom Attachment for Internally Illuminated Signs

	Tube Length		Band Length		Clamp Screw		Coating
AS-0129	- [ ]	-	[ ]	-	[ ]	-	[ ]
	23=23″ Tube 37=37″ Tube 46=46″ Tube 58=58″ Tube 74=74″ Tube		See Note		Blank=Galv SS=Stainless		PNC=Process No Color P_ _=Paint

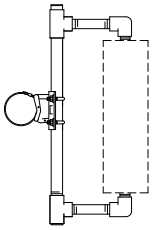

Note:
Band Length: 29″, 36″, 42″, 48″, 56″, 72″, 84″, 96″, or 114″.

Note: 1. All assemblies are supplied standard with stainless fasteners. Stainless upgrade shall include stainless steel clamp screws.
2. See Reference Section for clamp kit pole diameters.
3. See Reference Section for available paint colors.

ISO 9001 www.intlcert.com

Sign Bracket Assy for Rigid Structures Stellar Series

Pelco manufactures a variety of sign brackets in rigid and free-swinging mounts for both flat and internally illuminated signs. The sign bracket for rigid structures is available with 8" or 16" sign bar length

Sign Bracket Assy, Stellar Cable Mount For Rigid Structures w/ 24" Alum Tube

	Sign Bar Length		Cable Length		Cable		Coating
AS-0661	- [ ]	-	[ ]	-	[ ]	-	[ ]
	08=8" w/ Holes 6" CTC 16"=w/ Holes 9-3/4" CTC		See Note		Blank=Galv SS=Stainless		PNC=Process No Color P_ _=Paint

Note:
Cable Length: 62", 84", 96", 110", 120", 132", 144", 220", or 280".

Note: 1. All assemblies are supplied standard with stainless fasteners. Stainless upgrade shall include stainless steel cable.
2. See Reference Section for clamp kit pole diameters.
3. See Reference Section for available paint colors.

Galaxy T-Spar Sign Bracket

Pelco's Galaxy T-Spar Sign Bracket was designed to work with a 2" square perforated tube. The single cable plate allows for an easy installation and the tube saddle allows multi-directional adjustability. The perforated tube is sold separate.

Galaxy T-Spar Assy, Cable Mount

	Cable Length		Cable		Coating
AB-3056	- [ ]	-	[ ]	-	[ ]
	See Note		Blank=Galv SS=Stainless		PNC=Process No Color P_ _=Paint

Shown with tube.
Sold separately.

Note:
Cable Length: 62", 84", 96", 110", 120", 132", 144", 220", or 280".

Perforated Tube, 2" x 12 Ga Steel, Galv

	Length		Coating
SE-4191	- [ ]	-	[ ]
	72"=6' Tube		GLV=Galvanized P_ _=Paint

Note: 1. All assemblies are supplied standard with stainless fasteners. Stainless upgrade shall include stainless steel cable.
2. See Reference Section for clamp kit pole diameters.
3. See Reference Section for available paint colors.

ISO 9001 www.intlcert.com

Mast Arm Sign Bracket

Pelco manufactures a variety of sign brackets in rigid and free-swinging mounts for both flat and internally illuminated signs.

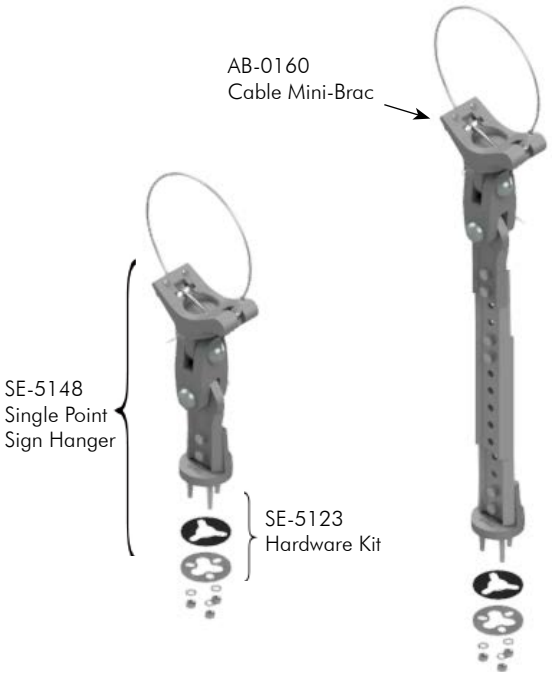

Sign Hanger Assy, Free-Swinging Tri-Stud, Stainless Bushings Cable Mini-Brac Mount, Alum

	Cable Length		Stainless Upgrade		Coating
SE-5146 -	[ ]	-	[ ]	-	[ ]
	See Note		Blank=Galv SS=Stainless		PNC=Process No Color P_ _=Paint

Note:
Cable Length: 45", 62", or 84".

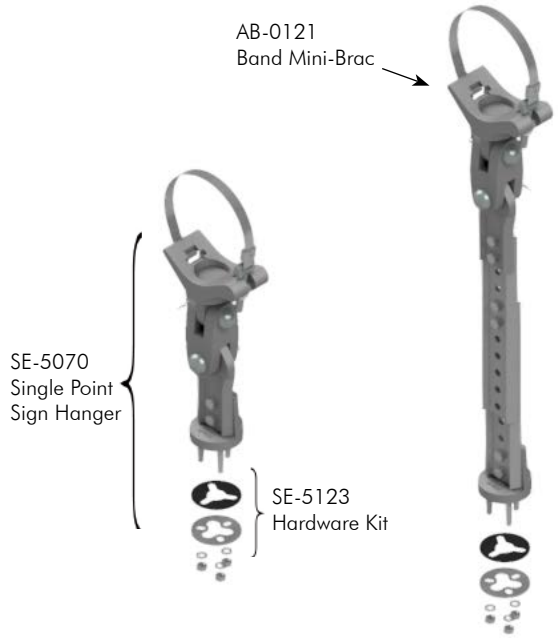

Sign Hanger Assy, Free-Swinging Tri-Stud, Stainless Bushings Band Mini-Brac Mount, Alum

	Cable Length		Stainless Upgrade		Coating
SE-5015 -	[ ]	-	[ ]	-	[ ]
	See Note		Blank=Galv SS=Stainless		PNC=Process No Color P_ _=Paint

Note:
Band Length: 29", 36", 42", 48", 56", 72", or 84".

Note: 1. All assemblies are supplied standard with stainless steel slotted washers and fasteners with galvanized pins and clamp screw or cable. Stainless upgrade shall include stainless hardware, pins, and clamp screw or cable.
2. See Reference Section for clamp kit pole diameters.
3. See Reference Section for available paint colors.

Mast Arm Sign Bracket

Pelco manufactures a variety of sign brackets in rigid and free-swinging mounts for both flat and internally illuminated signs.

Sign Hanger Assy, Free-Swinging w/ Band Mini-Brac for Overhead Street Name Sign

SE-5128 - [CTC] - [Band Length] - [Stainless Upgrade] - [Coating]

CTC	Band Length	Stainless Upgrade	Coating
*See Chart	See Note	Blank=Galv SS=Stainless	PNC=Process No Color P_ _=Paint

Note:
Band Length: 29″, 36″, 42″, 48″, 56″, 72″, or 84″.

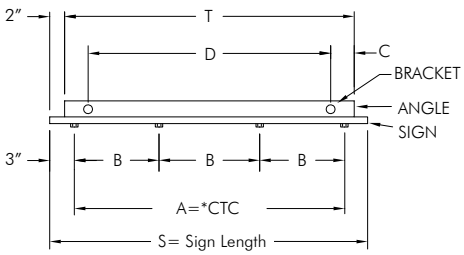

SIGNS 3′-6″ to 9′-0″ LONG					
SIGN LENGTH S	ANGLE LENGTH T	*CTC A	B	C	BRACKET D
2′0″	20″	18″	6″	3″	12″
2′2″	22″	20″	6.7″	4″	14″
2′6″	26″	24″	8″	6″	14″
3′0″	32″	30″	10″	6″	20″
3′6″	38″	36″	12″	7″	24″
4′0″	44″	42″	14″	8″	28″
4′6″	50″	48″	16″	9″	32″
5′0″	56″	54″	18″	10″	36″
5′6″	62″	60″	20″	11″	40″
6′0″	68″	66″	22″	12″	44″
6′6″	74″	72″	24″	13″	48″
6′10″	78″	76″	25.3″	14″	50″
7′0″	80″	78″	26″	14″	52″
7′6″	86″	84″	28″	15″	56″
8′0″	92″	90″	30″	16″	60″
8′6″	98″	96″	32″	17″	68″
9′0″	104″	102″	34″	18″	68″
9′6″	110″	108″	36″	19″	72″
10′0″	116″	114″	38″	20″	76″

Sign Hanger Assy, Free-Swinging w/ Cable Mini-Brac for Overhead Street Name Signs

SE-5188 - [CTC] - [Cable Length] - [Stainless Upgrade] - [Coating]

CTC	Cable Length	Stainless Upgrade	Coating
*See Chart	See Note	Blank=Galv SS=Stainless	PNC=Process No Color P_ _=Paint

Note:
Cable Length: 45″, 62″, or 84″.

Note: 1. All assemblies are supplied standard with stainless steel slotted washers and fasteners with galvanized pins and clamp screw or cable. Stainless upgrade shall include stainless hardware, pins, and clamp screw or cable.
2. See Reference Section for clamp kit pole diameters.
3. See Reference Section for available paint colors.

ISO 9001 www.intlcert.com

Span Wire Sign Hanger Assemblies

Pelco manufactures a variety of sign brackets in rigid and free-swinging mounts for both flat and internally illuminated signs.

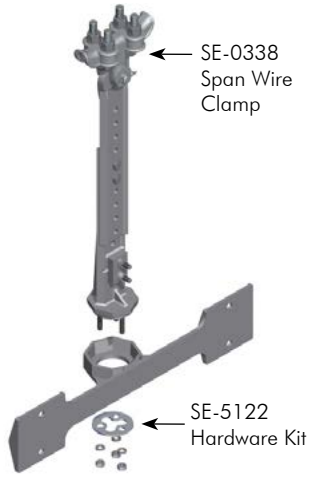

Span Wire Sign Hanger, 16" CTC, Adjustable with Tether, Alum

SE-5116 - [Bushing] - [Stainless Upgrade] - [Coating]

Bushing: Blank=None, SS=Stainless Bushing
Stainless Upgrade: Blank=Galv, SS=Stainless
Coating: PNC=Process No Color, P_ _=Paint

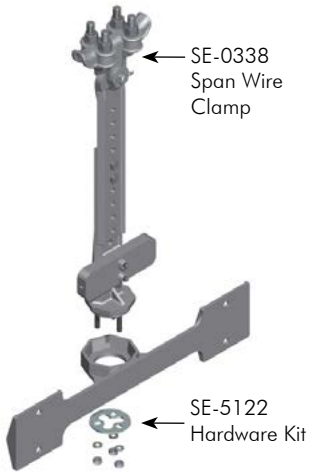

Span Wire Sign Hanger, 16" CTC, Adjustable with Stabilizer Bar, Alum

SE-5114 - [Bushing] - [Stainless Upgrade] - [Coating]

Bushing: Blank=None, SS=Stainless Bushing
Stainless Upgrade: Blank=Galv, SS=Stainless
Coating: PNC=Process No Color, P_ _=Paint

Span Wire Sign Hanger, Double, 16" CTC, Adjustable with Tether, Alum

SE-5112 - [Bushing] - [Stainless Upgrade] - [Coating]

Bushing: Blank=None, SS=Stainless Bushing
Stainless Upgrade: Blank=Galv, SS=Stainless
Coating: PNC=Process No Color, P_ _=Paint

Note: 1. All assemblies are supplied standard with stainless steel slotted washers and fasteners with galvanized hardware on span wire clamps. Stainless upgrade shall include stainless steel hardware and pins.
2. See Reference Section for available paint colors.

Span Wire Sign Hanger Assemblies

Pelco manufactures a variety of sign brackets in rigid and free-swinging mounts for both flat and internally illuminated signs.

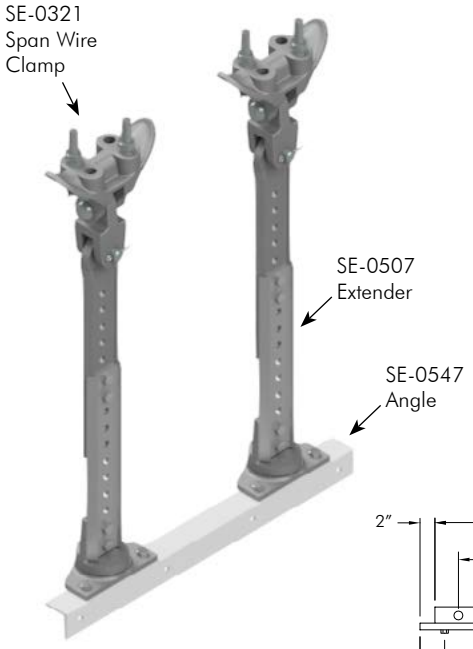

Sign Hanger Assy, Free-Swinging w/ Span Wire Clamp for Overhead Street Name Sign

	CTC	Extender	Bushing	Stainless Upgrade	Coating
SE-5219 -	[ ]	[ ]	[ ]	[ ]	[ ]
	*See Chart	Blank=No Extender 11=11″ Extenders	Blank=None SS=Stainless Bushing	Blank=Galv SS=Stainless	PNC=Process No Color P_ _=Paint

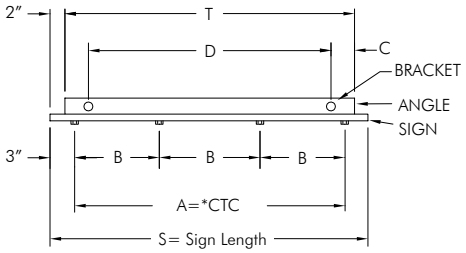

SIGNS 3′-6″ to 9′-0″ LONG					
SIGN LENGTH S	ANGLE LENGTH T	*CTC A	B	C	BRACKET D
2′0″	20″	18″	6″	3″	12″
2′2″	22″	20″	6.7″	4″	14″
2′6″	26″	24″	8″	6″	14″
3′0″	32″	30″	10″	6″	20″
3′6″	38″	36″	12″	7″	24″
4′0″	44″	42″	14″	8″	28″
4′6″	50″	48″	16″	9″	32″
5′0″	56″	54″	18″	10″	36″
5′6″	62″	60″	20″	11″	40″
6′0″	68″	66″	22″	12″	44″
6′6″	74″	72″	24″	13″	48″
6′10″	78″	76″	25.3″	14″	50″
7′0″	80″	78″	26″	14″	52″
7′6″	86″	84″	28″	15″	56″
8′0″	92″	90″	30″	16″	60″
8′6″	98″	96″	32″	17″	68″
9′0″	104″	102″	34″	18″	68″
9′6″	110″	108″	36″	19″	72″
10′0″	116″	114″	38″	20″	76″

Note: 1. All assemblies are supplied standard with stainless steel slotted washers and fasteners with galvanized hardware on span wire clamps. Stainless upgrade shall include stainless steel hardware and pins.
2. See Reference Section for available paint colors.

Span Wire Sign Hanger Assemblies

Pelco manufactures a variety of sign brackets in rigid and free-swinging mounts for both flat and internally illuminated signs.

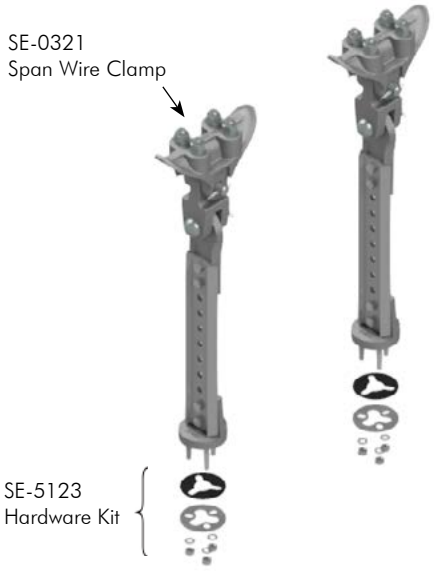

Sign Hanger Assy, Free-Swinging Span Wire Mount, Tri-Stud, Alum

SE-5214 - [Extender] - [Bushing] - [Stainless Upgrade] - [Coating]

- Extender: Blank=No Extender; 11=11″ Extenders
- Bushing: Blank=None; SS=Stainless Bushing
- Stainless Upgrade: Blank=Galv; SS=Stainless
- Coating: PNC=Process No Color; P_ _=Paint

Note:
Assembly shown with extenders.

Note: 1. All assemblies are supplied standard with stainless steel slotted washers and fasteners with galvanized hardware on span wire clamps. Stainless upgrade shall include stainless steel hardware and pins.
2. See Reference Section for available paint colors.

Span Wire Sign Hanger Assemblies

Pelco manufactures a variety of sign brackets in rigid and free-swinging mounts for both flat and internally illuminated signs.

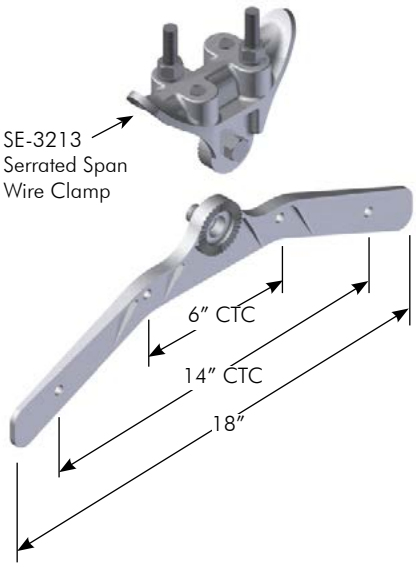

Span Wire Sign Hanger, 6" & 14" CTC
Serrated Span Wire Clamp, Alum

SE-5115 - [ ] - [ ]

Stainless Upgrade: Blank=Galv, SS=Stainless

Coating: PNC=Process No Color, P_ _=Paint

Span Wire Sign Hanger, 6" & 14" CTC
90° Span Wire Clamp, Adjustable, Alum

SE-5111 - [ ] - [ ]

Stainless Upgrade: Blank=Galv, SS=Stainless

Coating: PNC=Process No Color, P_ _=Paint

Note: 1. All assemblies are supplied standard with stainless steel slotted washers and fasteners with galvanized hardware on span wire clamps. Stainless upgrade shall include stainless steel hardware and pins.
2. See Reference Section for available paint colors.

ISO 9001 www.intlcert.com

Span Wire Sign Hanger Assemblies

Pelco manufactures a variety of sign brackets in rigid and free-swinging mounts for both flat and internally illuminated signs.

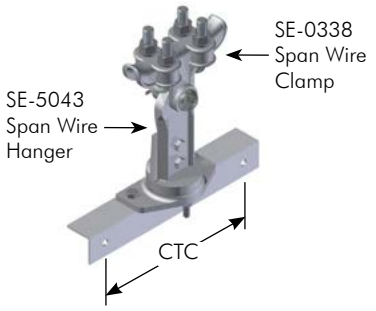

Sign Hanger Assy, Iron Span Wire Clamp, Alum

SE-5190 - [CTC] - [Bushing] - [Stainless Upgrade] - [Coating]

CTC	Bushing	Stainless Upgrade	Coating
See Chart	Blank=None SS=Stainless Bushing	Blank=Galv SS=Stainless	PNC=Process No Color P_ _=Paint

CTC	SIGN
11″	16″
13″	18″
19″	24″
25″	30″
31″	36″
37″	42″

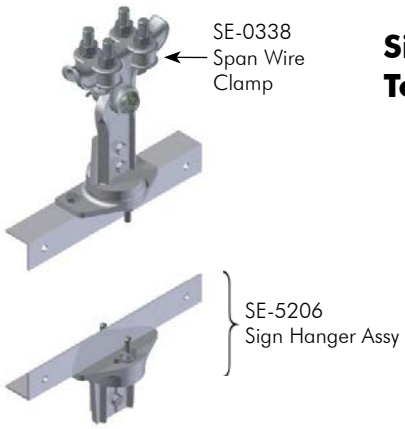

Sign Hanger Assy, Iron Span Wire Clamp, Top & Bottom Mount w/ Tether, Alum

SE-5189 - [CTC] - [Bushing] - [Stainless Upgrade] - [Coating]

CTC	Bushing	Stainless Upgrade	Coating
See Chart	Blank=None SS=Stainless Bushing	Blank=Galv SS=Stainless	PNC=Process No Color P_ _=Paint

CTC	SIGN
11″	16″
13″	18″
19″	24″
25″	30″
31″	36″
37″	42″

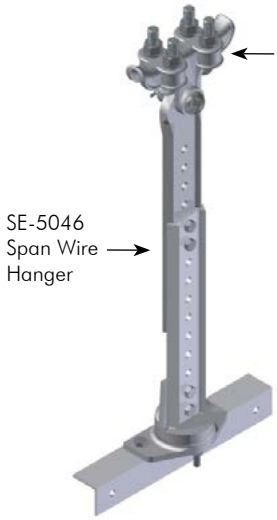

Sign Hanger Assy, Adjustable, Iron Span Wire Clamp, Alum

SE-5191 - [CTC] - [Tether Assy] - [Bushing] - [Stainless Upgrade] - [Coating]

CTC	Tether Assy	Bushing	Stainless Upgrade	Coating
See Chart	Blank=None T=Tether	Blank=None SS=Stainless Bushing	Blank=Galv SS=Stainless	PNC=Process No Color P_ _=Paint

CTC	SIGN
11″	16″
13″	18″
19″	24″
25″	30″
31″	36″
37″	42″

Note: 1. All assemblies are supplied standard with stainless steel slotted washers and fasteners with galvanized hardware on span wire clamps. Stainless upgrade shall include stainless steel hardware and pins.
2. See Reference Section for available paint colors.

Span Wire Sign Hanger Assemblies

Pelco manufactures a variety of sign brackets in rigid and free-swinging mounts for both flat and internally illuminated signs.

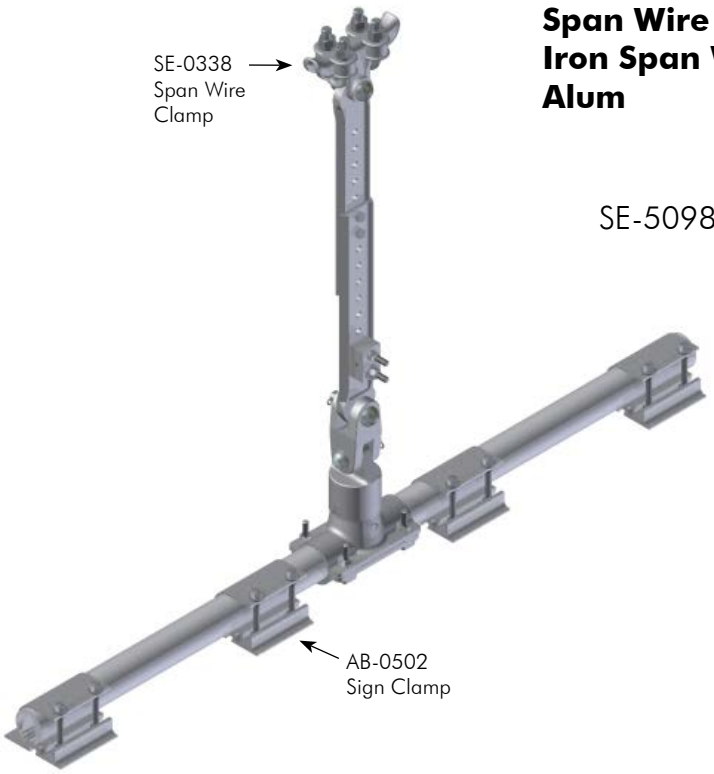

Span Wire Sign Hanger Assy, Free-Swinging Iron Span Wire Clamp, Tether & Sign Clamps, Alum

SE-5098 - [Bushing] - [Stainless Upgrade] - [Coating]

- Bushing: Blank=None; SS=Stainless Bushing
- Stainless Upgrade: Blank=Galv; SS=Stainless
- Coating: PNC=Process No Color; P_ _=Paint

Note: 1. All assemblies are supplied standard with stainless steel slotted washers and fasteners with galvanized hardware on span wire clamps. Stainless upgrade shall include stainless steel hardware and pins.
2. See Reference Section for available paint colors.

Span Wire Sign Hanger Assemblies

Pelco manufactures a variety of sign brackets in rigid and free-swinging mounts for both flat and internally illuminated signs.

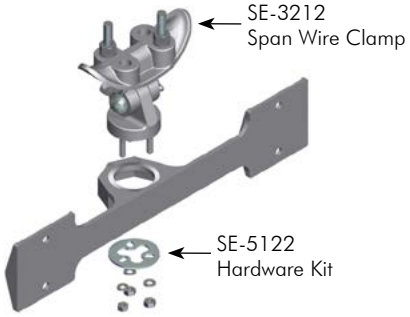

Free-Swinging Sign Hanger, 90° Span Wire Clamp, 16" CTC, Alum

SE-5117 - [Bushing] - [Stainless Upgrade] - [Coating]

Bushing: Blank=None, SS=Stainless Bushing
Stainless Upgrade: Blank=Galv, SS=Stainless
Coating: PNC=Process No Color, P__=Paint

Free-Swinging Sign Hanger, Serrated Span Wire Clamp, Adjustable, 16-1/2" CTC, Alum

SE-5169 - [Bushing] - [Stainless Upgrade] - [Coating]

Bushing: Blank=None, SS=Stainless Bushing
Stainless Upgrade: Blank=Galv, SS=Stainless
Coating: PNC=Process No Color, P__=Paint

Free-Swinging Sign Hanger, 90° Span Wire Clamp, 7-Hole, Alum

SE-5167 - [Bushing] - [Stainless Upgrade] - [Coating]

Bushing: Blank=None, SS=Stainless Bushing
Stainless Upgrade: Blank=Galv, SS=Stainless
Coating: PNC=Process No Color, P__=Paint

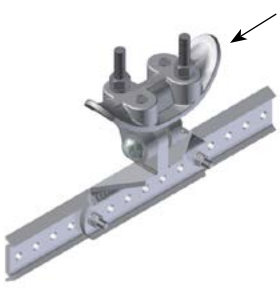

Free-Swinging Sign Hanger, 90° Span Wire Clamp, Extender, Alum

SE-5168 - [CTC] - [Stainless Upgrade] - [Coating]

CTC: See Chart
Stainless Upgrade: Blank=Galv, SS=Stainless
Coating: PNC=Process No Color, P__=Paint

CTC	EXTENDER
15"	16"
21"	22"
33"	34"

Note: 1. All assemblies are supplied standard with stainless steel slotted washers and fasteners with galvanized hardware on span wire clamps. Stainless upgrade shall include stainless steel hardware and pins.
2. See Reference Section for available paint colors.

Sign Mount Assemblies

Pelco manufactures a variety of sign brackets in both rigid and free-swinging mounts for flat and internally illuminated signs. Additional sign mounting options can be found in Section T16.

Adjustable Sign Mount Assy, Mast Arm, Alum

	Zee Bar CTC		Coating
SH-0112 -	☐	-	☐
	24=24″ 30=30″ 36=36″ 42=42″ Blank=None		PNC=Process No Color P_ _=Paint

Rear View

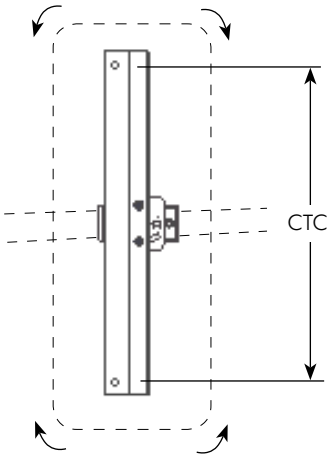

Note: 1. All assemblies are supplied standard with stainless fasteners.
2. See Reference Section for available paint colors.
3. See Section T16 for additional sign mounting assemblies.

Sign Accessories

Pelco's safety cable assemblies are available for span wire, Astro-Brac, and sign hanger assemblies.

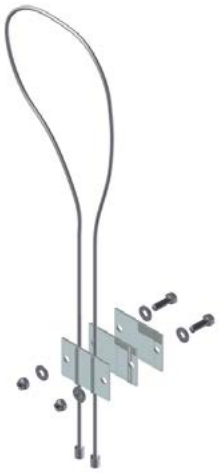

Safety Cable for Span Wire

	Cable Length		Cable
SE-3294 -	☐	-	☐
	84=84″ 96=96″ 110=110″		Blank=Galv SS=Stainless

Safety Cable for Astro-Brac

	Cable Length		Cable
AB-0503 -	☐	-	☐
	84=84″ 96=96″ 110=110″		Blank=Galv SS=Stainless

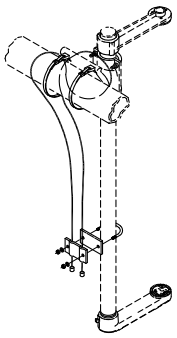

Safety Cable for Sign Hangers, Stainless

	Cable Length		
SH-1867 -	☐	-	SS
	24=24″ 48=48″ 72=72″ 100=100″ 120=120″		

Note: 1. All assemblies are supplied standard with stainless fasteners.
2. See Reference Section for available paint colors.

Sign Accessories

Accessories for sign mountings such as hangers, extenders, and tethers are available in a variety of configurations.

Hanger Assy, Extender Connector for 1/2" Slot, w/ 1-1/4" Bolts, Alum

SE-5037 - [Bushing] - [Coating]

Bushing: Blank=None, SS=Stainless Bushing

Coating: PNC=Process No Color, P__=Paint

Hanger Assy, Extender Connector for 3/4" Slot, w/ 1-1/4" Bolts, Alum

SE-5197 - [Bushing] - [Coating]

Bushing: Blank=None, SS=Stainless Bushing

Coating: PNC=Process No Color, P__=Paint

SE-5123 Hardware Kit

Hanger & Body Assy for 1/2" Slot, Tri-Stud, Alum

SE-5036 - [Bushing] - [Coating]

Bushing: Blank=None, SS=Stainless Bushing

Coating: PNC=Process No Color, P__=Paint

Extender Assy for 1/2" Slot, w/ Extender Connector & Extender, Alum

SE-5180 - [Extender Length] - [Bushing] - [Coating]

Extender Length: 11=11", 19=19", 40=40", 72=72"

Bushing: Blank=None, SS=Stainless Bushing

Coating: PNC=Process No Color, P__=Paint

Note: 1. All assemblies are supplied standard with stainless steel slotted washer and fasteners.
2. See Reference Section for available paint colors.

PELCO PRODUCTS, INC.
ISO 9001
www.intlcert.com

Sign Accessories

Accessories for sign mountings such as hangers, extenders, and tethers are available in a variety of configurations.

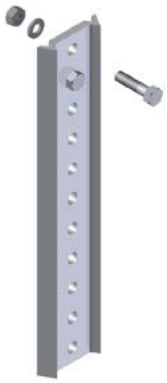

Extender, Alum w/ 5/16"-18 x 1-1/4" Bolts

Extender Length

SE-5181 - [ ] - PNC

06=6"
11=11"
19=19"
24=24"
40=40"
72=72"

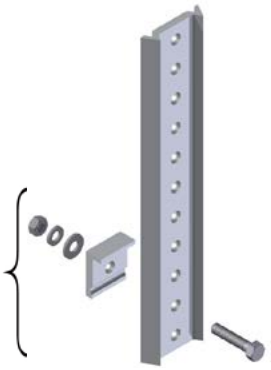

Extender Assy w/ Tether, Alum w/ 5/16"-18 x 1-1/2" Bolts

Extender Length

SE-5051 - [ ] - PNC

06=6"
11=11"
19=19"
24=24"
40=40"
72=72"

Extender Assy w/ 11" Extenders, Alum w/ 5/16"-18 x 1" & 1-1/2" Bolts

Coating

SE-5069 - [ ]

PNC=Process No Color
P_ _=Paint

Note: 1. All assemblies are supplied standard with stainless fasteners.
2. See Reference Section for available paint colors.

Sign Accessories

Accessories for sign mountings such as hangers, extenders and tethers are available in a variety of configurations.

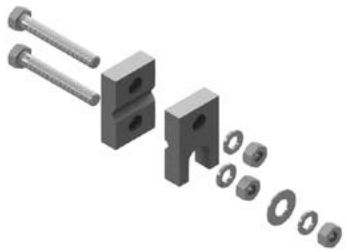

Tether Plate Assembly, Alum w/ 5/16"-18 x 2-1/4" Bolts

SE-5039 - [ ]

Coating

PNC=Process No Color
P_ _=Paint

Tether Plate Assembly, Alum w/ 5/16"-18 x 1-1/2" Bolts

SE-2509 - [ ]

Coating

PNC=Process No Color
P_ _=Paint

Tether Plate Assembly, Alum w/ Stabilizer Bars & 5/16"-18 x 1-3/4" Bolts

SE-2512 - [ ]

Coating

PNC=Process No Color
P_ _=Paint

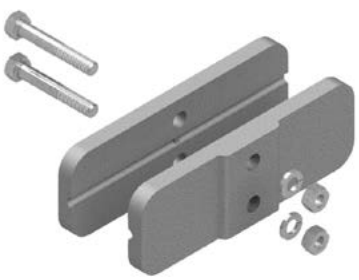

Tether Plate Assembly, Alum w/ Stabilizer Bar, Block, & 5/16"-18 x 2" Bolts

SE-2519 - [ ]

Coating

PNC=Process No Color
P_ _=Paint

Note: 1. All assemblies are supplied standard with stainless fasteners.
2. See Reference Section for available paint colors.

Astro-Brac 1-Piece Camera Bracket Cable Mount

Pelco makes adjustable brackets for cameras, sensors and antennas that can mount a variety of traffic industry devices. Video Detection camera brackets are available for mast arm, post top, span wire or side-of-pole applications.

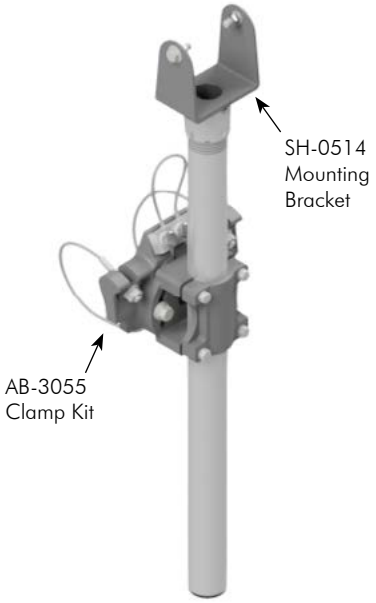

Camera Bracket, 1-Piece Extended Tilt & Pan, Alum Galaxy Cable Mount

	Tube Length		Cable Length		Cable		Coating
AG-0175 -	[ ]	-	[ ]	-	[ ]	-	[ ]
	23=23″ Tube 37=37″ Tube 46=46″ Tube 58=58″ Tube 74=74″ Tube		See Note		Blank=Galv SS=Stainless		PNC=Process No Color P_ _=Paint

Note:
Cable Length: 62″, 84″, 96″, 110″, 120″, 132″, 144″, 220″, or 280″.

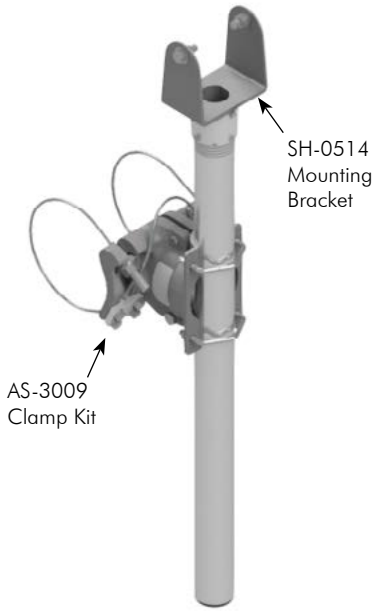

Camera Bracket, 1-Piece Extended Tilt & Pan, Alum Stellar Cable Mount

	Tube Length		Cable Length		Cable		Coating
AS-0175 -	[ ]	-	[ ]	-	[ ]	-	[ ]
	23=23″ Tube 37=37″ Tube 46=46″ Tube 58=58″ Tube 74=74″ Tube		See Note		Blank=Galv SS=Stainless		PNC=Process No Color P_ _=Paint

Note:
Cable Length: 62″, 84″, 96″, 110″, 120″, 132″, 144″, 220″, or 280″.

Note: 1. All assemblies are supplied standard with stainless steel fasteners.
2. See T7-20 for bracket size and mounting hole locations.
3. See Reference Section page iv for cable clamp kit pole diameters.
4. See Reference Section for available paint colors.

Astro-Brac
1-Piece Camera Bracket
Band and Tenon Mount

Pelco makes adjustable brackets for cameras, sensors and antennas that can mount a variety of traffic industry devices. Video Detection camera brackets are available for mast arm, post top, span wire or side-of-pole applications.

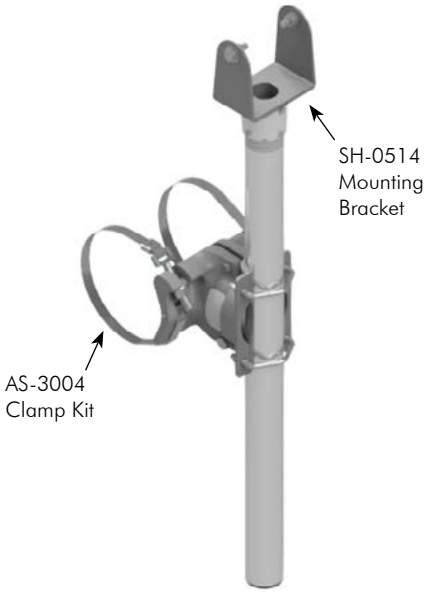

Camera Bracket, 1-Piece Extended Tilt & Pan, Alum Stellar Band Mount

AS-0170 - [Tube Length] - [Band Length] - [Clamp Screw] - [Coating]

Tube Length	Band Length	Clamp Screw	Coating
23=23″ Tube 37=37″ Tube 46=46″ Tube 58=58″ Tube 74=74″ Tube	See Note	Blank=Galv SS=Stainless	PNC=Process No Color P_ _=Paint

Note:
Band Length: 29″, 36″, 42″, 48″, 56″, 72″, 84″, 96″, or 114″.

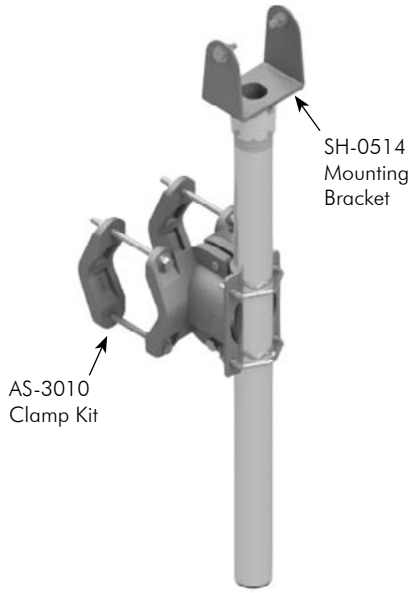

Camera Bracket, 1-Piece Extended Tilt & Pan, Alum Stellar Tenon Mount

AS-0629 - [Tube Length] - [Coating]

Tube Length	Coating
23=23″ Tube 37=37″ Tube 46=46″ Tube 58=58″ Tube 74=74″ Tube	PNC=Process No Color P_ _=Paint

Note:
Fits 1.9″ to 4.5″ diameter.

Note: 1. All assemblies are supplied standard with stainless steel fasteners.
2. See T7-20 for bracket size and mounting hole locations.
3. See Reference Section page iv for band clamp kit pole diameters.
4. See Reference Section for available paint colors.

Astro-Brac
1-Piece Camera Bracket with Service Wire Outlet

Pelco makes adjustable brackets for cameras, sensors and antennas that can mount a variety of traffic industry devices. Video Detection camera brackets are available for mast arm, post top, span wire or side-of-pole applications.

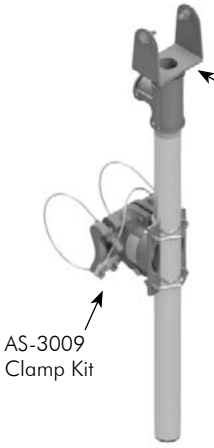

Camera Bracket, 1-Piece Extended Tilt & Pan w/ Service Wire Outlet, Alum Stellar Cable Mount

	Tube Length		Cable Length		Cable		Coating
AS-0166	- [ ]	-	[ ]	-	[ ]	-	[ ]
	23=23″ Tube 37=37″ Tube 46=46″ Tube 58=58″ Tube 74=74″ Tube		See Note		Blank=Galv SS=Stainless		PNC=Process No Color P_ _=Paint

Note:
Cable Length: 62″, 84″, 96″, 110″, 120″, 132″, 144″, 220″, or 280″.

Camera Bracket, 1-Piece Extended Tilt & Pan w/ Service Wire Outlet, Alum Stellar Band Mount

	Tube Length		Band Length		Clamp Screw		Coating
AS-0177	- [ ]	-	[ ]	-	[ ]	-	[ ]
	23=23″ Tube 37=37″ Tube 46=46″ Tube 58=58″ Tube 74=74″ Tube		See Note		Blank=Galv SS=Stainless		PNC=Process No Color P_ _=Paint

Note:
Band Length: 29″, 36″, 42″, 48″, 56″, 72″, 84″, 96″, or 114″.

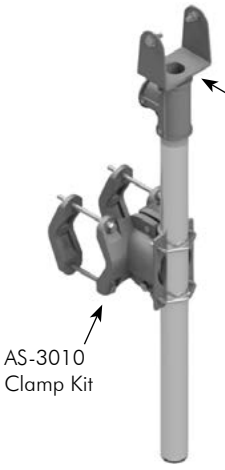

Camera Bracket, 1-Piece Extended Tilt & Pan w/ Service Wire Outlet, Alum Stellar Tenon Mount

	Tube Length		Coating
AS-0654	- [ ]	-	[ ]
	23=23″ Tube 37=37″ Tube 46=46″ Tube 58=58″ Tube 74=74″ Tube		PNC=Process No Color P_ _=Paint

Note:
Fits 1.9″ to 4.5″ diameter.

Note: 1. All assemblies are supplied standard with stainless steel fasteners.
2. See T7-20 for bracket size and mounting hole locations.
3. See Reference Section page iv for cable and band clamp kit pole diameters.
4. See Reference Section for available paint colors.

Astro-Brac
2-Piece Camera Bracket
Cable Mount

Pelco makes adjustable brackets for cameras, sensors and antennas that can mount a variety of traffic industry devices. Video Detection camera brackets are available for mast arm, post top, span wire or side-of-pole applications.

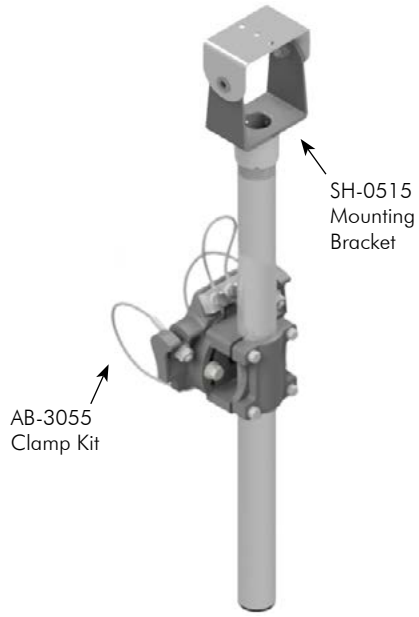

Camera Bracket, 2-Piece Extended Tilt & Pan, Alum Galaxy Cable Mount

	Tube Length		Cable Length		Cable		Coating
AG-0169 -	[ ]	-	[ ]	-	[ ]	-	[ ]
	23=23″ Tube 37=37″ Tube 46=46″ Tube 58=58″ Tube 74=74″ Tube		See Note		Blank=Galv SS=Stainless		PNC=Process No Color P_ _=Paint

Note:
Cable Length: 62″, 84″, 96″, 110″, 120″, 132″, 144″, 220″, or 280″.

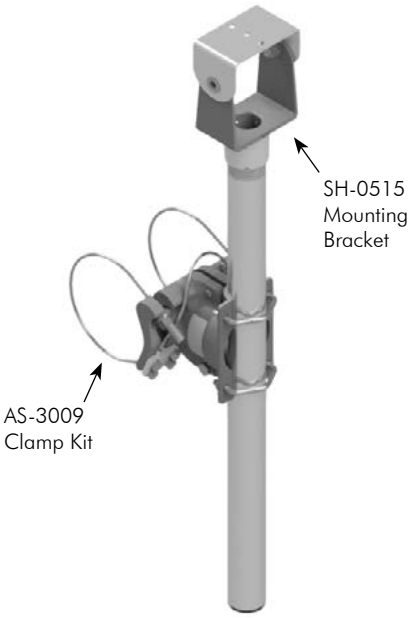

Camera Bracket, 2-Piece Extended Tilt & Pan, Alum Stellar Cable Mount, Alum

	Tube Length		Cable Length		Cable		Coating
AS-0169 -	[ ]	-	[ ]	-	[ ]	-	[ ]
	23=23″ Tube 37=37″ Tube 46=46″ Tube 58=58″ Tube 74=74″ Tube		See Note		Blank=Galv SS=Stainless		PNC=Process No Color P_ _=Paint

Note:
Cable Length: 62″, 84″, 96″, 110″, 120″, 132″, 144″, 220″, or 280″.

Note: 1. All assemblies are supplied standard with stainless steel fasteners.
2. See T7-20 for bracket size and mounting hole locations.
3. See Reference Section page iv for cable clamp kit pole diameters.
4. See Reference Section for available paint colors.

ISO 9001
www.intlcert.com

Astro-Brac 2-Piece Camera Bracket Band and Tenon Mount

Pelco makes adjustable brackets for cameras, sensors and antennas that can mount a variety of traffic industry devices. Video Detection camera brackets are available for mast arm, post top, span wire or side-of-pole applications.

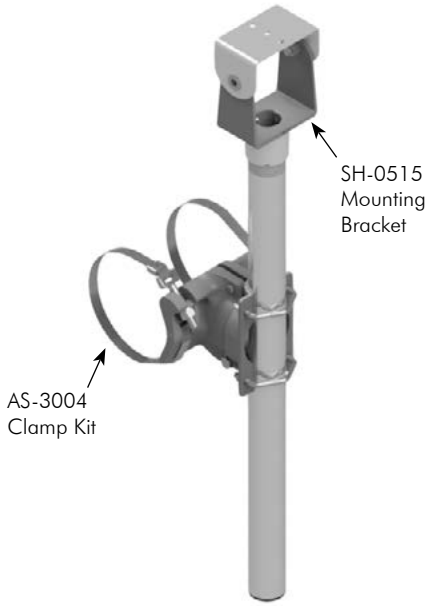

Camera Bracket, 2-Piece Extended Tilt & Pan, Alum Stellar Band Mount

	Tube Length		Band Length		Clamp Screw		Coating
AS-0172	- [ ]	-	[ ]	-	[ ]	-	[ ]
	23=23″ Tube 37=37″ Tube 46=46″ Tube 58=58″ Tube 74=74″ Tube		See Note		Blank=Galv SS=Stainless		PNC=Process No Color P_ _=Paint

Note:
Band Length: 29″, 36″, 42″, 48″, 56″, 72″, 84″, 96″, or 114″.

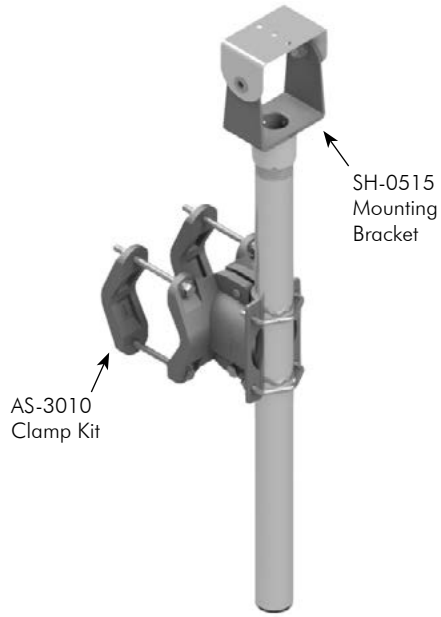

Camera Bracket, 2-Piece Extended Tilt & Pan, Alum Stellar Tenon Mount

	Tube Length		Coating
AS-0653	- [ ]	-	[ ]
	23=23″ Tube 37=37″ Tube 46=46″ Tube 58=58″ Tube 74=74″ Tube		PNC=Process No Color P_ _=Paint

Note:
Fits 1.9″ to 4.5″ diameter.

Note: 1. All assemblies are supplied standard with stainless steel fasteners.
2. See T7-20 for bracket size and mounting hole locations.
3. See Reference Section page iv for band clamp kit pole diameters.
4. See Reference Section for available paint colors.

Astro-Brac
2-Piece Camera Bracket with Service Wire Outlet

Pelco makes adjustable brackets for cameras, sensors and antennas that can mount a variety of traffic industry devices. Video Detection camera brackets are available for mast arm, post top, span wire or side-of-pole applications.

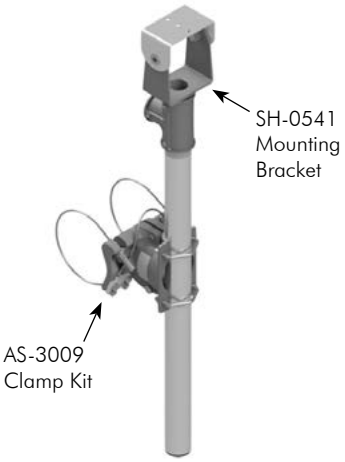

Camera Bracket, 2-Piece Extended Tilt & Pan w/ Service Wire Outlet, Alum Stellar Cable Mount

	Tube Length		Cable Length		Cable		Coating
AS-0164	- [ ]	-	[ ]	-	[ ]	-	[ ]
	23=23″ Tube 37=37″ Tube 46=46″ Tube 58=58″ Tube 74=74″ Tube		See Note		Blank=Galv SS=Stainless		PNC=Process No Color P_ _=Paint

Note:
Cable Length: 62″, 84″, 96″, 110″, 120″, 132″, 144″, 220″, or 280″.

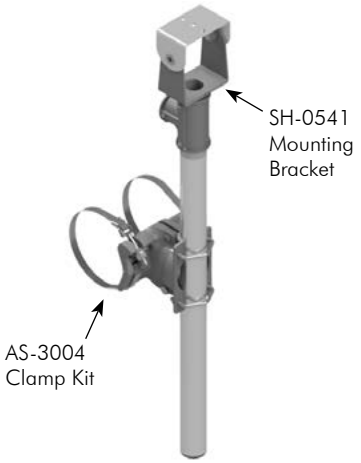

Camera Bracket, 2-Piece Extended Tilt & Pan w/ Service Wire Outlet, Alum Stellar Band Mount

	Tube Length		Band Length		Clamp Screw		Coating
AS-0173	- [ ]	-	[ ]	-	[ ]	-	[ ]
	23=23″ Tube 37=37″ Tube 46=46″ Tube 58=58″ Tube 74=74″ Tube		See Note		Blank=Galv SS=Stainless		PNC=Process No Color P_ _=Paint

Note:
Band Length: 29″, 36″, 42″, 48″, 56″, 72″, 84″, 96″, or 114″.

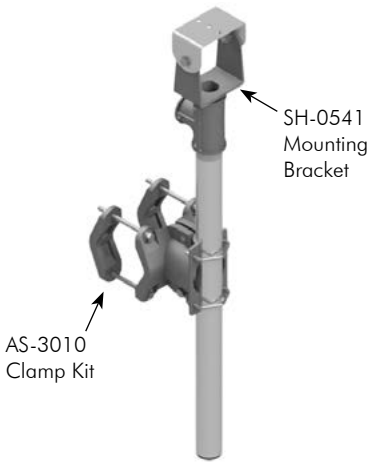

Camera Bracket, 2-Piece Extended Tilt & Pan w/ Service Wire Outlet, Alum Stellar Tenon Mount

	Tube Length		Coating
AS-0655	- [ ]	-	[ ]
	23=23″ Tube 37=37″ Tube 46=46″ Tube 58=58″ Tube 74=74″ Tube		PNC=Process No Color P_ _=Paint

Note:
Fits 1.9″ to 4.5″ diameter.

Note: 1. All assemblies are supplied standard with stainless steel fasteners.
2. See T7-20 for bracket size and mounting hole locations.
3. See Reference Section page iv for cable and band clamp kit pole diameters.
4. See Reference Section for available paint colors.

Astro-Brac 1-Piece Camera Bracket Triton Series

With three bands or cables and a 2-3/8" OD tube the Triton Camera Bracket is an ideal solution for heavier items and higher mountings. A member of the Astro-Brac family, the bracket rotates 360°, has greater strength, and can reach up to a 15' height.

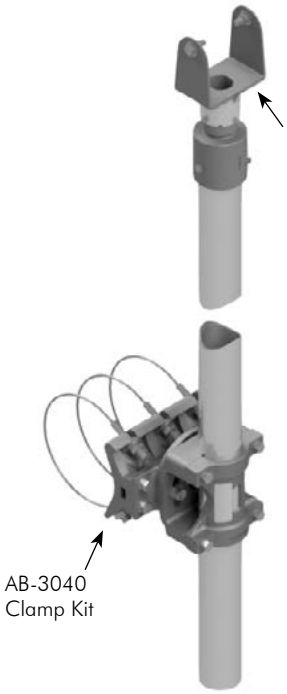

Camera Bracket, 1-Piece Extended Tilt & Pan, Alum Triton Cable Mount

	Tube Length In Inches		Cable Length		Cable		Coating
AB-0601	- [ ]	-	[ ]	-	[ ]	-	[ ]
	120=10' Tube 144=12' Tube 180=15' Tube		See Note		Blank=Galv SS=Stainless		PNC=Process No Color P_ _=Paint

Note:
Cable Length: 45", 62", or 84".

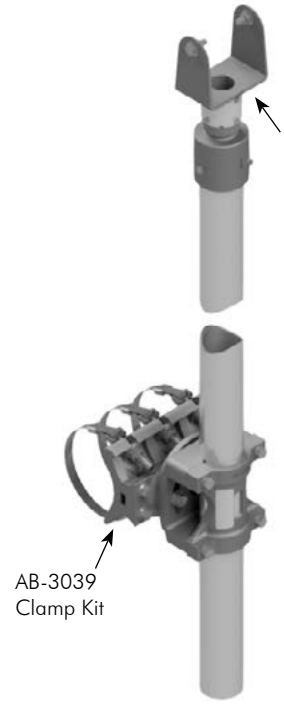

Camera Bracket, 1-Piece Extended Tilt & Pan, Alum Triton Band Mount

	Tube Length In Inches		Band Length		Clamp Screw		Coating
AS-0600	- [ ]	-	[ ]	-	[ ]	-	[ ]
	120=10' Tube 144=12' Tube 180=15' Tube		See Note		Blank=Galv SS=Stainless		PNC=Process No Color P_ _=Paint

Note:
Band Length: 29", 36", 42", 48", 56", 72", or 84".

Note: 1. All assemblies are supplied standard with stainless steel fasteners.
2. See T7-20 for bracket size and mounting hole locations.
3. See Reference Section page iv for cable and band clamp kit pole diameters.
4. See Reference Section for available paint colors.

Astro-Brac 1-Piece Camera Bracket with Service Wire Outlet Triton Series

With three bands or cables and a 2-3/8" OD tube the Triton Camera Bracket is an ideal solution for heavier items and higher mountings. A member of the Astro-Brac family, the bracket rotates 360°, has greater strength, and can reach up to a 15' height.

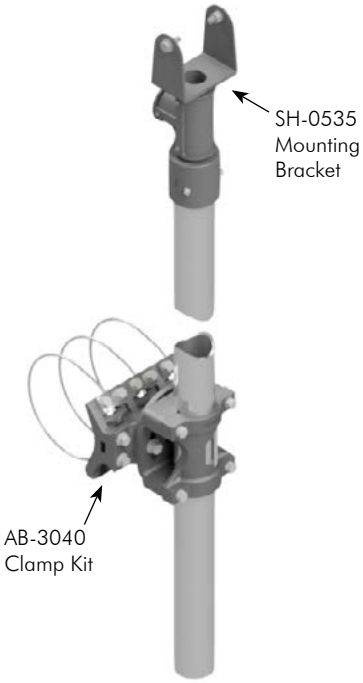

Camera Bracket, 1-Piece Extended Tilt & Pan w/ Service Wire Outlet, Alum Triton Cable Mount

	Tube Length In Inches		Cable Length		Cable		Coating
AB-0613	- [ ]	-	[ ]	-	[ ]	-	[ ]
	120=10' Tube 144=12' Tube 180=15' Tube		See Note		Blank=Galv SS=Stainless		PNC=Process No Color P_ _=Paint

Note:
Cable Length: 45", 62", or 84".

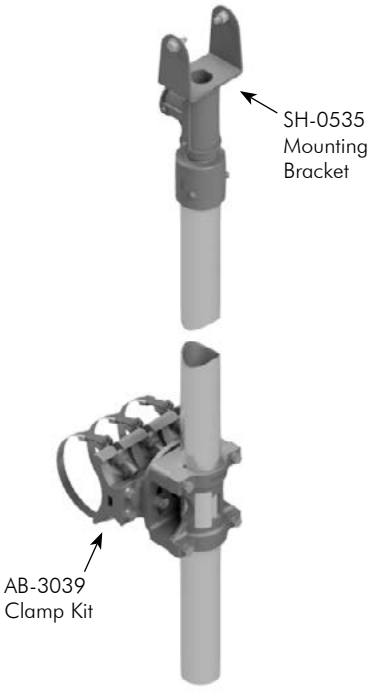

Camera Bracket, 1-Piece Extended Tilt & Pan w/ Service Wire Outlet, Alum Triton Band Mount

	Tube Length In Inches		Band Length		Clamp Screw		Coating
AS-0612	- [ ]	-	[ ]	-	[ ]	-	[ ]
	120=10' Tube 144=12' Tube 180=15' Tube		See Note		Blank=Galv SS=Stainless		PNC=Process No Color P_ _=Paint

Note:
Band Length: 29", 36", 42", 48", 56", 72", or 84".

Note: 1. All assemblies are supplied standard with stainless steel fasteners.
2. See T7-20 for bracket size and mounting hole locations.
3. See Reference Section page iv for cable and band clamp kit pole diameters.
4. See Reference Section for available paint colors.

Astro-Brac 2-Piece Camera Bracket Triton Series

With three bands or cables and a 2-3/8" OD tube the Triton Camera Bracket is an ideal solution for heavier items and higher mountings. A member of the Astro-Brac family, the bracket rotates 360°, has greater strength, and can reach up to a 15' height.

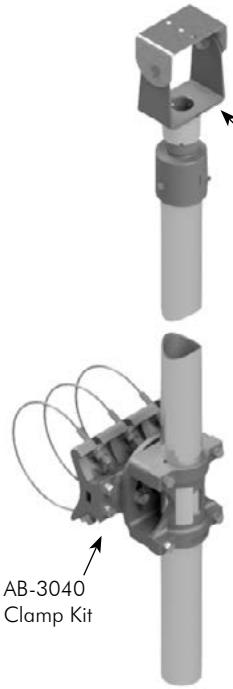

Camera Bracket, 2-Piece Extended Tilt & Pan, Alum Triton Cable Mount

	Tube Length In Inches		Cable Length		Cable		Coating
AB-0611	- [ ]	-	[ ]	-	[ ]	-	[ ]
	120=10' Tube 144=12' Tube 180=15' Tube		See Note		Blank=Galv SS=Stainless		PNC=Process No Color P_ _=Paint

Note:
Cable Length: 45", 62", or 84".

Camera Bracket, 2-Piece Extended Tilt & Pan, Alum Triton Band Mount

	Tube Length In Inches		Band Length		Clamp Screw		Coating
AS-0610	- [ ]	-	[ ]	-	[ ]	-	[ ]
	120=10' Tube 144=12' Tube 180=15' Tube		See Note		Blank=Galv SS=Stainless		PNC=Process No Color P_ _=Paint

Note:
Band Length: 29", 36", 42", 48", 56", 72", or 84".

Note: 1. All assemblies are supplied standard with stainless steel fasteners.
2. See T7-20 for bracket size and mounting hole locations.
3. See Reference Section page iv for cable and band clamp kit pole diameters.
4. See Reference Section for available paint colors.

Astro-Brac 2-Piece Camera Bracket with Service Wire Outlet Triton Series

With three bands or cables and a 2-3/8" OD tube the Triton Camera Bracket is an ideal solution for heavier items and higher mountings. A member of the Astro-Brac family, the bracket rotates 360°, has greater strength, and can reach up to a 15' height.

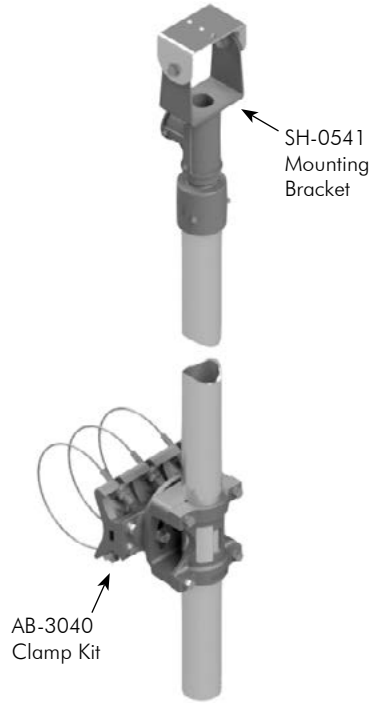

Camera Bracket, 2-Piece Extended Tilt & Pan w/ Service Wire Outlet, Alum Triton Cable Mount

	Tube Length In Inches		Cable Length		Cable		Coating
AB-0615	- [ ]	-	[ ]	-	[ ]	-	[ ]
	120=10' Tube 144=12' Tube 180=15' Tube		See Note		Blank=Galv SS=Stainless		PNC=Process No Color P_ _=Paint

Note:
Cable Length: 45", 62", or 84".

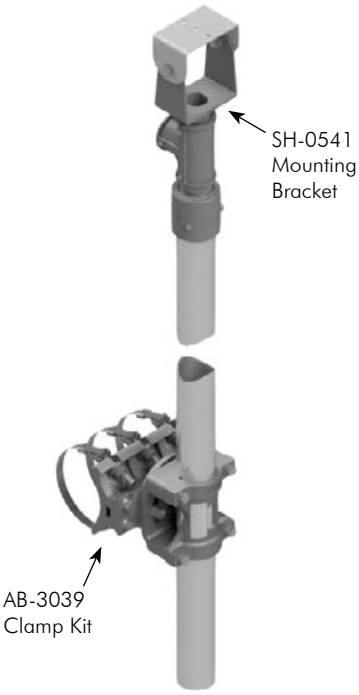

Camera Bracket, 2-Piece Extended Tilt & Pan w/ Service Wire Outlet, Alum Triton Band Mount

	Tube Length In Inches		Band Length		Clamp Screw		Coating
AS-0614	- [ ]	-	[ ]	-	[ ]	-	[ ]
	120=10' Tube 144=12' Tube 180=15' Tube		See Note		Blank=Galv SS=Stainless		PNC=Process No Color P_ _=Paint

Note:
Band Length: 29", 36", 42", 48", 56", 72", or 84".

Note: 1. All assemblies are supplied standard with stainless steel fasteners.
2. See T7-20 for bracket size and mounting hole locations.
3. See Reference Section page iv for cable and band clamp kit pole diameters.
4. See Reference Section for available paint colors.

ISO 9001 www.intlcert.com

Astro-Brac Camera Bracket COHU Type

Designed to mount COHU type cameras, the 1-piece or 2-piece brackets have a 4-3/4" mounting bolt circle. Brackets are available with Pelco's Stellar series clamp kits with a 1-15/16" OD tube or the more robust Triton series clamp kits with a 2-3/8" OD tube.

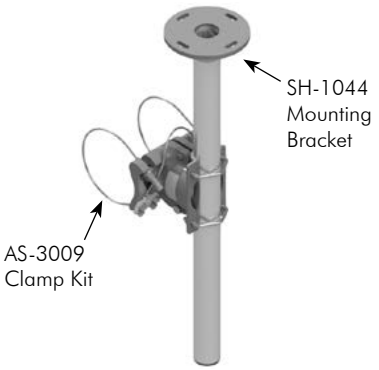

Camera Bracket, COHU Type, Alum Stellar Cable Mount

	Tube Length		Cable Length		Cable		Coating
AS-0619	- [ ]	-	[ ]	-	[ ]	-	[ ]
	23=23" Tube 37=37" Tube 46=46" Tube 58=58" Tube 74=74" Tube		See Note		Blank=Galv SS=Stainless		PNC=Process No Color P_ _=Paint

Note:
Cable Length: 62", 84", 96", 110", 120", 132", 144", 220", or 280".

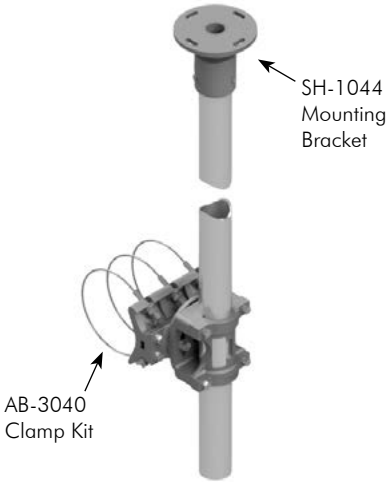

Camera Bracket, COHU Type, Alum Triton Cable Mount

	Tube Length In Inches		Cable Length		Cable		Coating
AB-0628	- [ ]	-	[ ]	-	[ ]	-	[ ]
	120=10' Tube 144=12' Tube 180=15' Tube		See Note		Blank=Galv SS=Stainless		PNC=Process No Color P_ _=Paint

Note:
Cable Length: 45", 62", or 84".

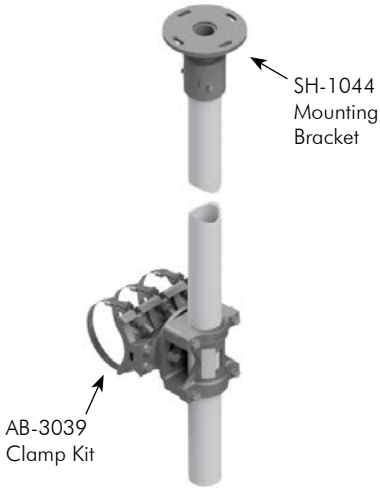

Camera Bracket, COHU Type, Alum Triton Band Mount

	Tube Length In Inches		Band Length		Clamp Screw		Coating
AB-0627	- [ ]	-	[ ]	-	[ ]	-	[ ]
	120=10' Tube 144=12' Tube 180=15' Tube		See Note		Blank=Galv SS=Stainless		PNC=Process No Color P_ _=Paint

Note:
Band Length: 29", 36", 42", 48", 56", 72", or 84".

Note: 1. All assemblies are supplied standard with stainless steel fasteners.
2. See T7-21 for bracket size and mounting hole locations.
3. See Reference Section page iv for cable and band clamp kit pole diameters.
4. See Reference Section for available paint colors.

Astro-Brac Camera Bracket COHU Type

Designed to mount COHU type cameras, the 1-piece or 2-piece brackets have a 4-3/4" mounting bolt circle. Brackets are available with Pelco's Stellar series clamp kits with a 1-15/16" OD tube or the more robust Triton series clamp kits with a 2-3/8" OD tube.

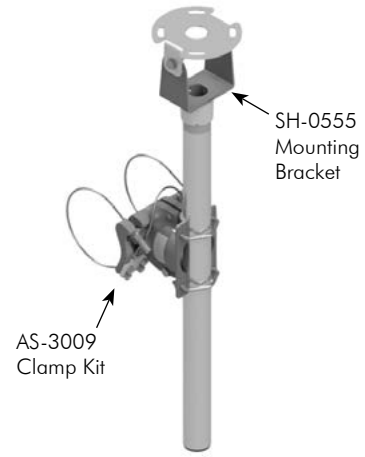

Camera Bracket, 2-Piece COHU Type
Adjustable, Alum
Stellar Cable Mount

	Tube Length In Inches		Cable Length		Cable		Coating
AS-0682	- [ ]	-	[ ]	-	[ ]	-	[ ]
	120=10′ Tube 144=12′ Tube 180=15′ Tube		See Note		Blank=Galv SS=Stainless		PNC=Process No Color P_ _=Paint

Note:
Cable Length: 62", 84", 96", 110", 120", 132", 144", 220", or 280".

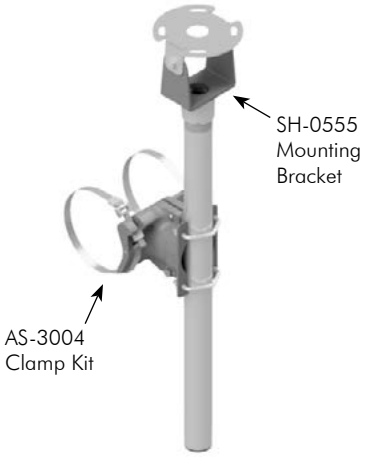

Camera Bracket, 2-Piece COHU Type
Adjustable, Alum
Stellar Band Mount

	Tube Length In Inches		Band Length		Clamp Screw		Coating
AS-0681	- [ ]	-	[ ]	-	[ ]	-	[ ]
	120=10′ Tube 144=12′ Tube 180=15′ Tube		See Note		Blank=Galv SS=Stainless		PNC=Process No Color P_ _=Paint

Note:
Band Length: 29", 36", 42", 48", 56", 72", 84", 96", or 114".

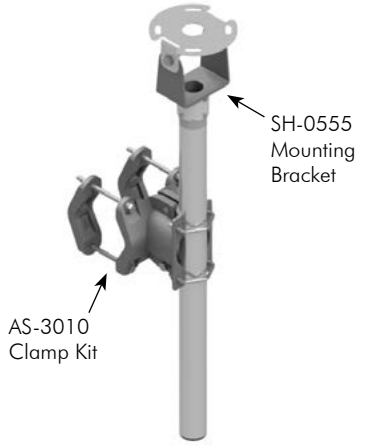

Camera Bracket, 2-Piece COHU Type
Adjustable, Alum
Stellar Tenon Mount

	Tube Length In Inches		Coating
AS-0683	- [ ]	-	[ ]
	120=10′ Tube 144=12′ Tube 180=15′ Tube		PNC=Process No Color P_ _=Paint

Note:
Fits 1.9" to 4.5" diameter.

Note: 1. All assemblies are supplied standard with stainless steel fasteners.
2. See T7-21 for bracket size and mounting hole locations.
3. See Reference Section page iv for cable and band clamp kit pole diameters.
4. See Reference Section for available paint colors.

Mast Arm Mount

Pelco makes adjustable brackets for cameras, sensors and antennas that can mount a variety of traffic industry devices. Video Detection camera brackets are available for mast arm, post top, span wire or side-of-pole applications.

Camera Bracket, 1-Piece Tilt & Pan, Alum Mast Arm Mount

SH-0510 - [ ] (Coating)

PNC=Process No Color
P_ _=Paint

Camera Bracket, 2-Piece Tilt & Pan, Alum Mast Arm Mount

SH-0501 - [ ] (Coating)

PNC=Process No Color
P_ _=Paint

SH-0514
Mounting Bracket

Camera Bracket, 1-Piece Extended Tilt & Pan, Alum Mast Arm Mount

SH-0509 - [ ] (Nipple Length) - [ ] (Coating)

06=6″ Nipple
10=10″ Nipple
11=11″ Nipple
12=12″ Nipple

PNC=Process No Color
P_ _=Paint

SH-0515
Mounting Bracket

Camera Bracket, 2-Piece Extended Tilt & Pan, Alum Mast Arm Mount, Alum

SH-0504 - [ ] (Nipple Length) - [ ] (Coating)

06=6″ Nipple
10=10″ Nipple
11=11″ Nipple
12=12″ Nipple

PNC=Process No Color
P_ _=Paint

Note: 1. All assemblies are supplied standard with stainless steel fasteners.
2. See T7-20 for bracket size and mounting hole locations.
3. See Reference Section page iv for cable and band clamp kit pole diameters.
4. See Reference Section for available paint colors.

Side-of-Pole Extended Vertical Mount

Pelco makes adjustable brackets for cameras, sensors and antennas that can mount a variety of traffic industry devices. Video Detection camera brackets are available for mast arm, post top, span wire or side-of-pole applications.

Camera Bracket, 1-Piece Extended Tilt & Pan, Alum Vertical Mount

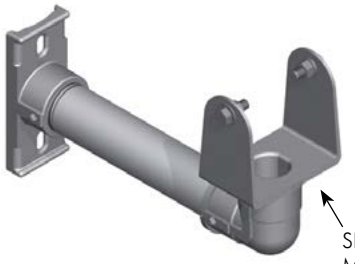

SH-0535
Mounting
Bracket

SH-0527 - [Nipple Length] - [Coating]

Nipple Length:
11=11″ Nipple
12=12″ Nipple
24=24″ Nipple

Coating:
PNC=Process No Color
P_ _=Paint

Camera Bracket, 2-Piece Extended Tilt & Pan, Alum Vertical Mount

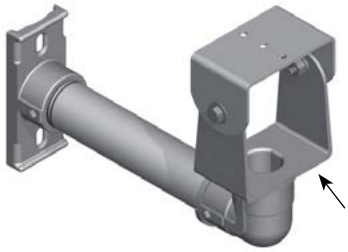

SH-0541
Mounting
Bracket

SH-0503 - [Nipple Length] - [Coating]

Nipple Length:
11=11″ Nipple
12=12″ Nipple
24=24″ Nipple

Coating:
PNC=Process No Color
P_ _=Paint

Note: 1. All assemblies are supplied standard with stainless steel fasteners.
2. See T7-20 for bracket size and mounting hole locations.
3. See Reference Section page iv for cable and band clamp kit pole diameters.
4. See Reference Section for available paint colors.

Post Top Mount

Pelco makes adjustable brackets for cameras, sensors and antennas that can mount a variety of traffic industry devices. Video Detection camera brackets are available for mast arm, post top, span wire or side-of-pole applications.

Camera Bracket, 1-Piece Tilt & Pan, Alum Post Top Mount for 4-1/2" OD Pole

SH-0520 - [ ] Coating

PNC=Process No Color
P_ _=Paint

Camera Bracket, 2-Piece Tilt & Pan, Alum Post Top Mount for 4-1/2" OD Pole

SH-0519 - [ ] Coating

PNC=Process No Color
P_ _=Paint

Note: 1. All assemblies are supplied standard with stainless steel fasteners.
2. See T7-20 for bracket size and mounting hole locations.
3. See Reference Section page iv for cable and band clamp kit pole diameters.
4. See Reference Section for available paint colors.

Span Wire Mount

Pelco makes adjustable brackets for cameras, sensors and antennas that can mount a variety of traffic industry devices. Video Detection camera brackets are available for mast arm, post top, span wire or side-of-pole applications.

Camera Bracket, 2-Piece Extended Tilt & Pan w/ Service Wire Outlet, Alum Span Wire Mount

SH-0526 - [Tube Length] - [Stainless Upgrade] - [Coating]

Tube Length:
23=23″ Tube
37=37″ Tube
46=46″ Tube
58=58″ Tube
74=74″ Tube

Stainless Upgrade:
Blank=Galv
SS=Stainless

Coating:
PNC=Process No Color
P_ _=Paint

Camera Bracket, 2-Piece Extended Tilt & Pan w/ Service Wire Outlet Span Wire Mount, Alum

SH-0532 - [Tube Length] - [Stainless Upgrade] - [Coating]

Tube Length:
23=23″ Tube
37=37″ Tube
46=46″ Tube
58=58″ Tube
74=74″ Tube

Stainless Upgrade:
Blank=Galv
SS=Stainless

Coating:
PNC=Process No Color
P_ _=Paint

Note: 1. All assemblies are supplied standard with stainless fasteners, with galvanized hardware on span wire clamps. Stainless upgrade shall include stainless steel hardware and pins.
2. See T7-20 for bracket size and mounting hole locations.
3. See Reference Section for available paint colors.

ISO 9001
www.intlcert.com

Orbital Mount

Pelco's Orbital Mount is a versatile and flexible mounting assembly. The ball and socket mechanism provides a 360 degree adjustable mounting solution for a variety of traffic signal devices, including wireless radios and traffic detectors.

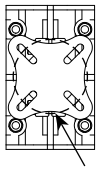

SH-0533-PXX shown
(no detector mount)

Bracket Assy, Universal Orbital Mount, Alum

SH-0553 - [Detector Mount] - [Coating]

Detector Mount: Blank=None; T29T30=Med/Long Range Wide View; T32 =Long Range Narrow View

Coating: PNC=Process No Color; P__=Paint

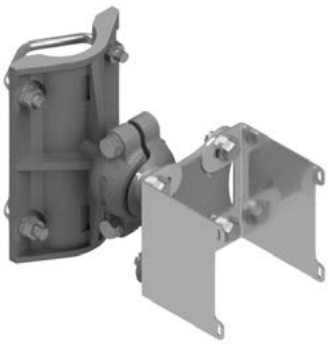

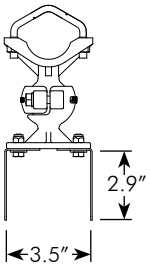

SH-0533-T29T30-PXX shown
(medium & long range wide view detector mount)

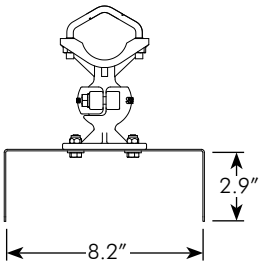

SH-0533-T32-PXX shown
(long range narrow view detector mount)

Bracket Assy, Universal Orbital Mount, Cable Mini-Brac, Alum

SH-0554 - [Cable Length] - [Cable] - [Coating]

Cable Length: See Note

Cable: Blank=Galv; SS=Stainless

Coating: PNC=Process No Color; P__=Paint

Note:
Cable Length: 45", 62", or 84".

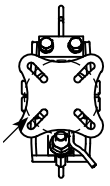

Note: 1. All assemblies are supplied standard with stainless steel fasteners.
2. See Reference Section for available paint colors.

Astro-Brac Camera Bracket Dome Type

Designed to mount the dome type cameras, these articulating brackets are available with Pelco's Stellar series clamp kits with a 1-15/16" OD bent tube.

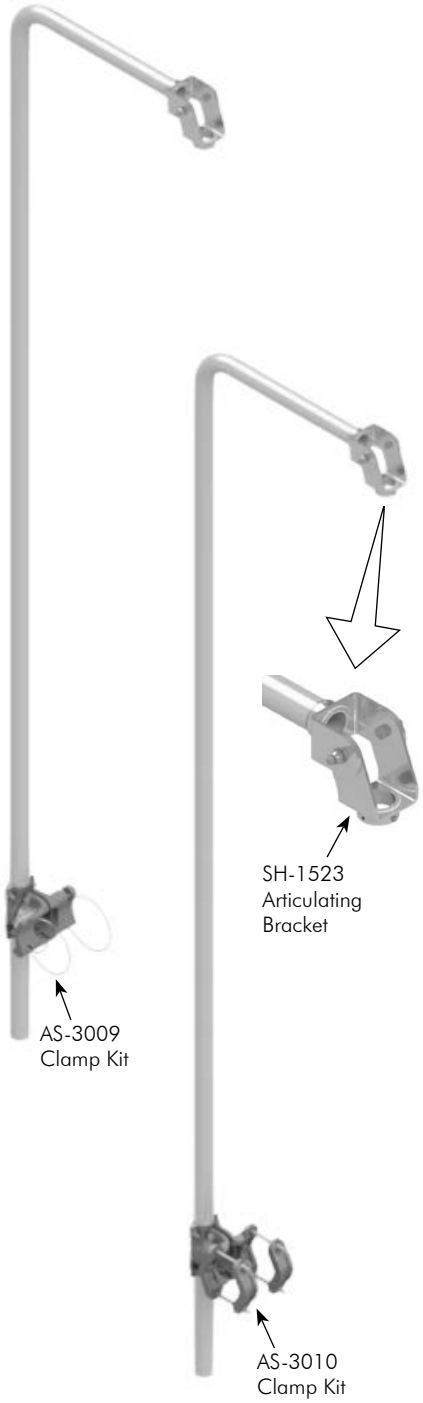

Camera Bracket, Dome Camera Type, Alum 1-1/2" NPS x 120" Sch 40 Alum Bent Tube Stellar Cable Mount

	Tube Length		Cable Length		Cable		Coating
AS-0687	- [ ]	-	[ ]	-	[ ]	-	[ ]
	60=60" Tube 96=96" Tube 120=120" Tube		See Note		Blank=Galv SS=Stainless		PNC=Process No Color P_ _=Paint

Note:
Cable Length: 62", 84", 96", 110", 120", 132", 144", 220", or 280".

Camera Bracket, Dome Camera Type, Alum 1-1/2" NPS x 120" Bent Tube Stellar Tenon Mount

	Tube Length		Coating
AS-0686	- [ ]	-	[ ]
	60=60" Tube 96=96" Tube 120=120" Tube		PNC=Process No Color P_ _=Paint

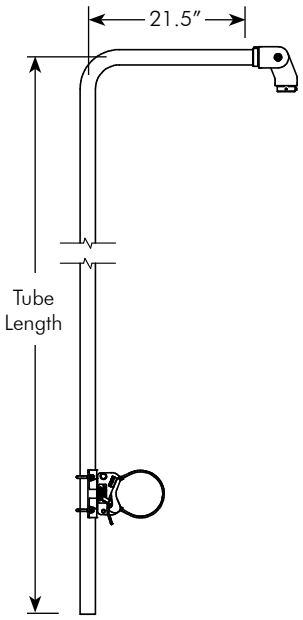

Note: 1. All assemblies are supplied standard with stainless fasteners.
2. See Reference Section page iv for cable clamp kit pole diameters.
3. See Reference Section for available paint colors.

Astro-Brac Camera Bracket Dome Type

Designed to mount the dome type cameras, this articulating bracket is available with Pelco's more robust Triton series clamp kit with a 2-3/8" OD bent tube.

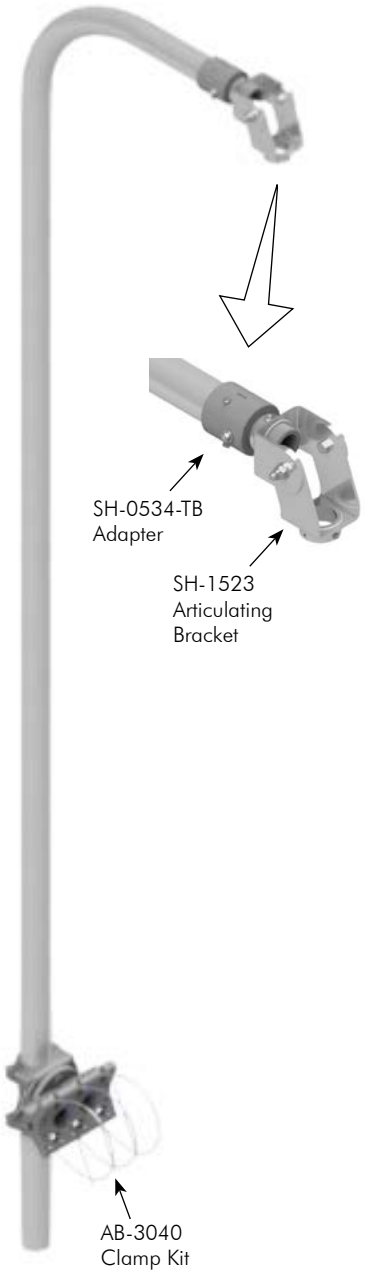

Camera Bracket, Dome Camera Type, Alum 2" NPS x 120" Sch 40 Alum Bent Tube Triton Cable Mount

	Cable Length	Cable	Coating
AB-0680 -	[ ]	- [ ]	- [ ]
	See Note	Blank=Galv SS=Stainless	PNC=Process No Color P_ _=Paint

Note:
Cable Length: 45", 62", 84"

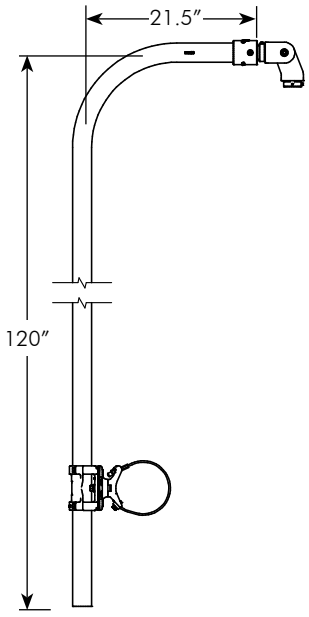

Note: 1. All assemblies are supplied standard with stainless fasteners.
2. See Reference Section page iv for cable clamp kit pole diameters.
3. See Reference Section for available paint colors.

Camera Bracket

Pelco's manufactures 1-piece and 2-piece brackets for various camera styles. Special brackets with mounting holes other than listed below are available upon request.

Camera Bracket, 1-Piece Tilt & Pan, Alum 1-1/2" NPS Internal Threads

SH-0514 - [ ] Coating

PNC=Process No Color
P__=Paint

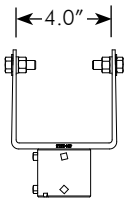

Camera Bracket, 2-Piece Tilt & Pan, Alum 1-1/2" NPS Internal Threads

SH-0515 - [ ] Coating

PNC=Process No Color
P__=Paint

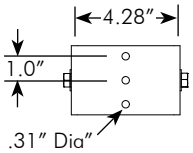

Camera Bracket, 1-Piece Tilt & Pan, Alum 1-1/2" NPS External Threads

SH-0535 - [ ] Coating

PNC=Process No Color
P__=Paint

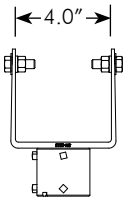

Camera Bracket, 2-Piece Tilt & Pan, Alum 1-1/2" NPS External Threads

SH-0541 - [ ] Coating

PNC=Process No Color
P__=Paint

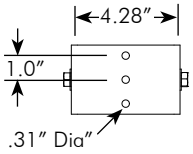

Camera Bracket, 1-Piece Tilt & Pan, Alum 1-1/2" NPS Internal Threads

SH-0537 - [ ] Coating

PNC=Process No Color
P__=Paint

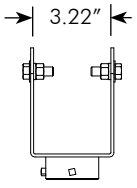

Note: 1. All assemblies are supplied standard with stainless steel fasteners.
2. Special brackets available upon request.
3. See Reference Section for available paint colors.

Camera Bracket

Pelco's manufactures 1-piece and 2-piece brackets for various camera styles. Special brackets with mounting holes other than listed below are available upon request.

Camera Bracket, Offset Articulating, 1-1/2" NPS, Alum

SH-1523 - [ ] Coating

PNC=Process No Color
P_ _=Paint

Camera Bracket, Pole Top 1-1/2" NPS 4-3/4" Bolt Circle for COHU Camera, Alum

SH-1044 - [ ] Coating

PNC=Process No Color
P_ _=Paint

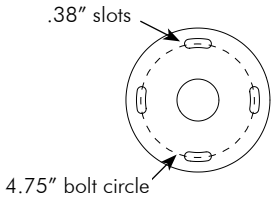

Camera Bracket, Pole Top 2-Piece, 1-1/2" NPS 4-3/4" Bolt Circle for COHU Camera, Alum

SH-0555 - [ ] Coating

PNC=Process No Color
P_ _=Paint

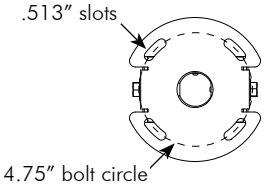

Orbital Ball Mount, 1-1/2" NPS External Threads 2" to 3-1/2" BC, Alum

SH-0556 - [ ] Coating

PNC=Process No Color
P_ _=Paint

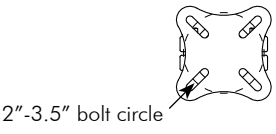

Note: 1. All assemblies are supplied standard with stainless steel fasteners.
2. Special brackets available upon request.
3. See Reference Section for available paint colors.

IntelliCross APS

The IntelliCross APS is the state-of-the-art solution for solving pedestrian traffic challenges. The IntelliCross turns a pre-timed pedestrian intersection into a fully actuated intersection. Pre-loaded or custom audio messages with remote or local configuration access are only two of the many key features of Pelco's intelligent pedestrian system.
Contact Pelco for additional information.

APS Assy, IntelliCross w/ Single Arrow, for 5" x 7-3/4" Sign, Alum

SE-2900 - [ ] Coating

PNC=Process No Color
P_ _=Paint

APS Assy, IntelliCross w/ Single Arrow, Custom Configured for 5" x 7-3/4" Sign, Alum

SE-2901 - [ ] Coating

PNC=Process No Color
P_ _=Paint

Note:
Power Interface Module included.
Pedestrian signs, sign adapters, and double arrow kits sold separately.

CIU, Communication Interface Unit, Compact for APS IntelliCross Button

SE-6172-PNC

Note:
CUI is optional. Only required for advanced features.

Note: 1. All assemblies are supplied standard with stainless steel fasteners.
2. For pedestrian signs available refer to pages T8-23 through T8-25.
3. See Reference Section for available paint colors.

IntelliCross APS

The IntelliCross APS is the state-of-the-art solution for solving pedestrian traffic challenges. The IntelliCross turns a pre-timed pedestrian intersection into a fully actuated intersection. Pre-loaded or custom audio messages with remote or local configuration access are only two of the many key features of Pelco's intelligent pedestrian system.
Contact Pelco for additional information.

Adapter Assy, 9" x 15", w/ Hardware IntelliCross, Alum

SE-2174 - Coating [ ]

PNC=Process No Color
P_ _=Paint

Adapter Assy, 9" x 12", w/ Hardware IntelliCross, Alum

SE-2171 - Coating [ ]

PNC=Process No Color
P_ _=Paint

Adapter Assy, 9" x 3", w/ Hardware IntelliCross, Alum

SE-2175 - Coating [ ]

PNC=Process No Color
P_ _=Paint

Arrow, Double for APS IntelliCross Push Button, w/ Hardware, Alum

SE-6170-2 - Coating [ ]

P_ _=Paint

Note: 1. All assemblies are supplied standard with stainless steel fasteners.
2. See Reference Section for available paint colors.

Modular Station Kits

The unique line of modular push button stations provide flexability by adapting various size sign stations to round or oval push button cover assemblies. Stations can be ordered as a complete unit or as modular kits to assemble for variations in sign size and push button covers.

SE-2132-15-PLED-P29 shown.

Modular Push Button Station Assy, 9" x 15"
Piezo Passport w/ LED, Alum, Federal Yellow

5" x 7-3/4"
Modular Kit

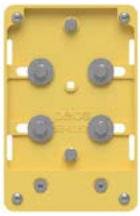

SE-6193 - [ ] Coating
PNC=Process No Color
P_ _=Paint

9" x 12"
Modular Kit

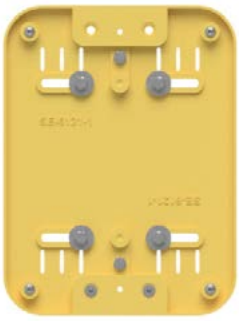

SE-6121 - [ ] Coating
PNC=Process No Color
P_ _=Paint

9" x 3"
Modular Kit
(attaches to 9"x12
for a 9" x 15" sign)

SE-6123 - [ ] Coating
PNC=Process No Color
P_ _=Paint

Oval Cover
Adapter Kit

SE-6124 - [ ] Coating
PNC=Process No Color
P_ _=Paint

2-Hole Cover
Adapter Kit

SE-6122 - [ ] Coating
PNC=Process No Color
P_ _=Paint

4-Hole Cover
Adapter Kit

SE-6189 - [ ] Coating
PNC=Process No Color
P_ _=Paint

Oval w/ Directional Arrow
Cover Assy
Piezo or Mechanical

Note: For a complete selection of cover assemblies available see pages T8-10 and T8-15.

Round Cover Assy,
2-Hole Mount
Piezo or Mechanical

Round Cover Assy,
4-Hole Mount
Piezo

Note: 1. All assemblies are supplied standard with stainless steel fasteners.
2. For pedestrian signs available refer to pages T8-23 through T8-25.
3. See Reference Section for available paint colors.

Modular Station Assembly
Piezo Switch

These unique Pelco push button stations feature a versatile modular design that provides flexability by adapting different push button cover assemblies, both latching and non-latching, to multiple size sign stations.

SE-2132-7-PLED-P29 shown.

SE-2132-12-PLED-P29 shown.

SE-2132-15-P4HLED-P29 shown.

Modular Push Button Station Assy, Piezo Switch, Alum

SE-2132 - [Size] - [Button] - [Coating]

Size:
- 7=5″ x 7-3/4″
- 12=9″x12″
- 15=9″x15″

Button:
- P=Piezo
- PLED=Piezo w/ LED
- PLED-LCH=Piezo w/ Latching LED
- P4H= Piezo 4-Hole
- P4HLED=Piezo 4-Hole w/ LED
- P4HLED-LCH= Piezo 4-Hole w/ Latching LED

Coating:
- PNC=Process No Color
- P_ _=Paint

Note:
Latching option requires SE-1041 Controller Assy.

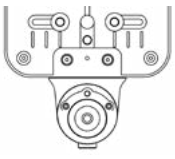

2-Hole Cover

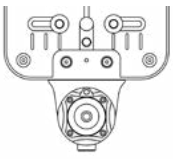

4-Hole Cover

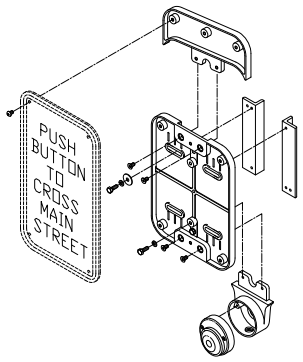

Modular Station
(sign sold seperately)

Note: 1. All assemblies are supplied standard with stainless steel fasteners.
2. Latching units are latched on during the "Don't Walk" cycle with the addition of the SE-1041 controller.
3. For pedestrian signs available refer to pages T8-23 through T8-25.
4. See Reference Section for available paint colors.

ISO 9001 www.intlcert.com

Modular Station Assembly Oval w/ Directional Arrow Piezo Switch

These unique Pelco push button stations feature a versatile modular design that provides flexability by adapting different push button cover assemblies, both latching and non-latching, to multiple size sign stations.

SE-2134-7-PLED-1-P29 shown.

Modular Push Button Station Assy, Oval w/ Directional Arrow Piezo Switch, Alum

	Size		Button		Arrow		Coating
SE-2134 -	☐	-	☐	-	☐	-	☐
	7=5" x 7-3/4" 12=9"x12" 15=9"x15"		PLED=Piezo w/ LED PLED-LCH=Piezo w/ Latching LED		1=Single 2=Double		PNC=Process No Color P_ _=Paint

Note:
Latching option requires SE-1041 Controller Assy.

SE-2134-12-PLED-1-P29 shown.

SE-2134-15-PLED-LCH-2-P29 shown.

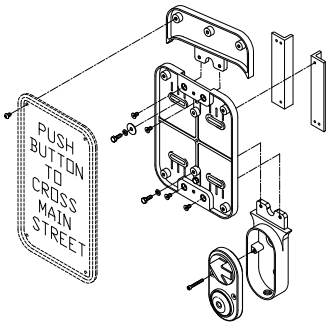

Modular Station
(sign sold seperately)

Note: 1. All assemblies are supplied standard with stainless steel fasteners.
2. Latching units are latched on during the "Don't Walk" cycle with the addition of the SE-1041 controller.
3. For pedestrian signs available refer to pages T8-23 through T8-25.
4. See Reference Section for available paint colors.

This page is intentionally left blank.

ISO 9001
www.intlcert.com

Push Button Assembly, Passport Piezo Switch

The Passport Pedestrian Push Button is Piezo based, utilizing the latest technology. It's durable impact and vandal resistant construction, made of die cast aluminum and stainless steel, is virtually weatherproof. Available in 2-hole or 4-hole mount and with or without LED. Contact Pelco for information on customizing the button with a laser etched logo.

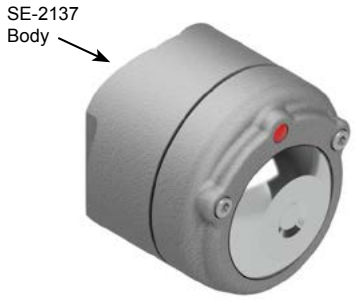

Push Button Assy, Passport Pole Mount, Alum Piezo Switch w/ LED

SE-2120 - [Latching] - [Coating]

Blank=Non-Latching PNC=Process No Color
LCH=Latching P_ _=Paint

Note:
Latching option requires SE-1041 Controller Assy.

Pole Mount

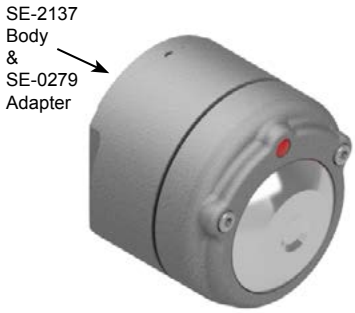

Push Button Assy, Passport Flat Back Mount, Alum Piezo Switch w/ LED

SE-2154 - [Latching] - [Coating]

Blank=Non-Latching PNC=Process No Color
LCH=Latching P_ _=Paint

Note:
Latching option requires SE-1041 Controller Assy.

Flat Back Mount

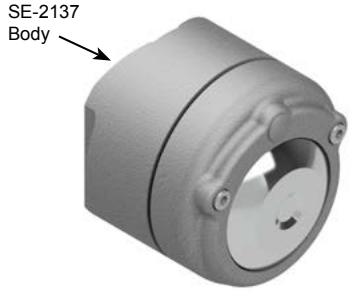

Push Button Assy, Passport Pole Mount, Alum Piezo Switch w/o LED

SE-2165 - [Coating]

PNC=Process No Color
P_ _=Paint

Pole Mount

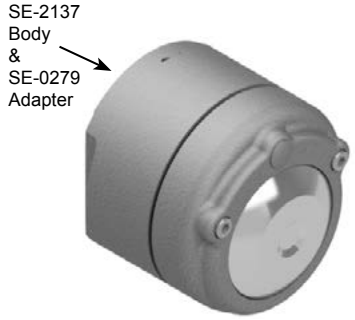

Push Button Assy, Passport Flat Back Mount, Alum Piezo Switch w/o LED

SE-2166 - [Coating]

PNC=Process No Color
P_ _=Paint

Flat Back Mount

Note: 1. All assemblies are supplied standard with stainless steel fasteners.
2. Latching units are latched on during the "Don't Walk" cycle with the addition of the SE-1041 controller.
3. See Reference Section for available paint colors.

Push Button Assembly, Passport Piezo Switch

The Passport Pedestrian Push Button is Piezo based, utilizing the latest technology. It's durable impact and vandal resistant construction, made of die cast aluminum and stainless steel, is virtually weatherproof. Available in 2-hole or 4-hole mount and with or without LED. Contact Pelco for information on customizing the button with a laser etched logo.

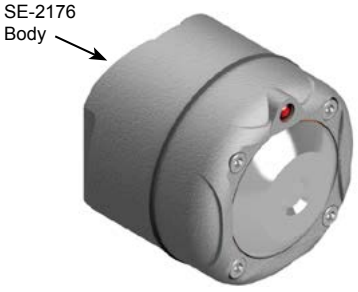

Passport Push Button Assy, Alum Pole Mount, 4-Hole Cover w/ LED

SE-2170 - [Latching] - [Coating]

Blank=Non-Latching
LCH=Latching

PNC=Process No Color
P_ _=Paint

Pole Mount

Note:
Latching option requires SE-1041 Controller Assy.

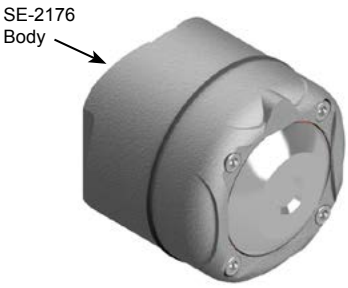

Passport Piezo Push Button Assy, Alum Pole Mount, 4-Hole Cover w/o LED

SE-2178 - [Coating]

PNC=Process No Color
P_ _=Paint

Flat Back Mount

Note: 1. All assemblies are supplied standard with stainless steel fasteners.
2. Latching units are latched on during the "Don't Walk" cycle with the addition of the SE-1041 controller.
3. See Reference Section for available paint colors.

ISO 9001 www.intlcert.com

Push Button Assembly
Oval w/ Directional Arrow
Piezo Switch

Pelco's Piezo oval push button with directional arrow is available for round pole or flat back mounting. The oval push button has the option of a single or double adjustable arrow and with or without an LED indicator.

Push Button Assy, Pole Mount, Alum
Oval w/ Directional Arrow
Piezo Switch w/ LED

SE-2162 - [Arrow] - [Latching] - [Coating]

Arrow	Latching	Coating
1=Single Arrow 2=Double Arrow	Blank=Non-Latching LCH=Latching	PNC=Process No Color P_ _=Paint

Note:
Latching option requires SE-1041 Controller Assy.

Pole Mount

Push Button Assy, Flat Back Mount, Alum
Oval w/ Directional Arrow
Piezo Switch w/ LED

SE-2163 - [Arrow] - [Latching] - [Coating]

Arrow	Latching	Coating
1=Single Arrow 2=Double Arrow	Blank=Non-Latching LCH=Latching	PNC=Process No Color P_ _=Paint

Note:
Latching option requires SE-1041 Controller Assy.

Flat Back Mount

Note: 1. All assemblies are supplied standard with stainless steel fasteners.
2. Latching units are latched on during the "Don't Walk" cycle with the addition of the SE-1041 controller.
3. See Reference Section for available paint colors.

Cover Assembly
Piezo Switch

The Passport Pedestrian Push Button is Piezo based, utilizing the latest technology. It's durable impact and vandal resistant construction, made of die cast aluminum and stainless steel, is virtually weatherproof. Available in 2-hole or 4-hole mount and with or without LED. Contact Pelco for information on customizing the button with a laser etched logo.

Cover Assy, Passport Piezo Push Button w/ LED

SE-2119 - [Latching] - [Coating]

Latching: Blank=Non-Latching, LCH=Latching
Coating: PNC=Process No Color, P_ _=Paint

Note: Latching option requires SE-1041 Controller Assy.

Cover Assy, Passport Piezo Push Button w/o LED

SE-2164 - [Coating]

PNC=Process No Color
P_ _=Paint

Cover Assy, Passport Piezo Push Button 4-Hole Mount w/ LED

SE-2172 - [Latching] - [Coating]

Latching: Blank=Non-Latching, LCH=Latching
Coating: PNC=Process No Color, P_ _=Paint

Note: Latching option requires SE-1041 Controller Assy.

Cover Assy, Passport Piezo Push Button 4-Hole Mount w/o LED

SE-2179 - [Latching] - [Coating]

Latching: Blank=Non-Latching, LCH=Latching
Coating: PNC=Process No Color, P_ _=Paint

Cover Assy, Oval Piezo Push Button w/ Directional Arrow & LED

SE-2161 - [Arrow] [Latching] [Coating]

Arrow: 1=Single Arrow, 2=Double Arrow
Latching: Blank=Non-Latching, LCH=Latching
Coating: PNC=Process No Color, P_ _=Paint

Note:
Latching option requires SE-1041 Controller Assy.

Note: 1. All assemblies are supplied standard with stainless steel fasteners.
2. Latching units are latched on during the "Don't Walk" cycle with the addition of the SE-1041 controller.
3. See Reference Section for available paint colors.

Modular Station Assembly
Mechanical Switch

These unique Pelco push button stations feature a versatile modular design that provides flexability by adapting different push button cover assemblies, both latching and non-latching, to multiple size sign stations.

SE-2132-7-M-P29 shown.

SE-2132-12-M-P29 shown.

SE-2132-15-MLED-LCH-P29 shown.

Modular Push Button Station Assy, Mechanical Switch, Alum

SE-2132 - Size [ ] - Button [ ] - Coating [ ]

Size	Button	Coating
7=5″ x 7-3/4″	M=Mechanical	PNC=Process No Color
12=9″x12″	MLED-LCH= Mech w/ Latching LED	P_ _=Paint
15=9″x15″		

Note:
Latching option requires SE-1013 Latch Assy or SE-1041 Controller Assy.

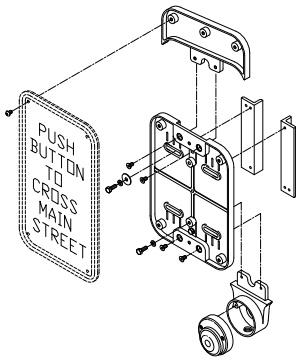

9″ x 15″ Modular Station shown
(sign sold seperately)

Note: 1. All assemblies are supplied standard with stainless steel fasteners.
2. Latching units are latched on during the "Don't Walk" cycle with the addition of SE-1041 or SE-1013 controller.
3. For pedestrian signs available refer to pages T8-23 through T8-25.
4. See Reference Section for available paint colors.

ISO 9001 www.intlcert.com

Modular Station Assembly
Oval w/ Directional Arrow
Mechanical Switch

These unique Pelco push button stations feature a versatile modular design that provides flexability by adapting different push button cover assemblies, both latching and non-latching, to multiple size sign stations.

SE-2134-7-M-1-P29 shown.

Modular Push Button Station Assy, Oval w/ Directional Arrow Mechanical Switch, Alum

	Size		Button		Arrow		Coating
SE-2134 -	☐	-	☐	-	☐	-	☐
	7=5″ x 7-3/4″ 12=9″x12″ 15=9″x15″		M=Mechanical MLED-LCH= Mech w/ Latching LED		1=Single 2=Double		PNC=Process No Color P_ _=Paint

Note:
Latching option requires SE-1013 Latch Assy or SE-1041 Controller Assy.

SE-2134-12-MLED-LCH-1-P29 shown.

SE-2134-15-MLED-LCH-2-P29 shown.

SE-6123
Adapter

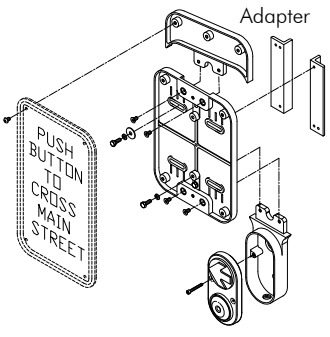

9″ x 15″ Modular Station shown
(sign sold seperately)

Note: 1. All assemblies are supplied standard with stainless steel fasteners.
2. Latching units are latched on during the "Don't Walk" cycle with the addition of the SE-1041 or SE-1013 controller.
3. For pedestrian signs available refer to pages T8-23 through T8-25.
4. See Reference Section for available paint colors.

ISO 9001
www.intlcert.com

Push Button Assembly
Mechanical Switch

Pelco has a full line of ADA compliant pedestrian push buttons and stations, mechanical and Piezo, that are available with or without LED indicators. Contact Pelco for information on additional push button assemblies not shown in the catalog.

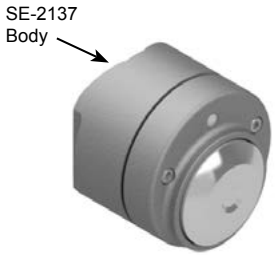

Round Push Button Assy, Pole Mount, Alum Mechanical Switch

SE-2005 - [Button] - [Coating]

M=Mechanical
MLED-LCH= Mech w/ Latching LED

PNC=Process No Color
P_ _=Paint

Pole Mount

Note:
Latching option requires SE-1013 Latch Assy or SE-1041 Controller Assy.

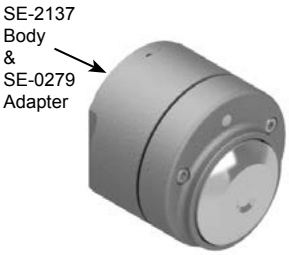

Round Push Button Assy, Flat Back, Alum Mechanical Switch

SE-2006 - [Button] - [Coating]

M=Mechanical
MLED-LCH= Mech w/ Latching LED

PNC=Process No Color
P_ _=Paint

Flat Back Mount

Note:
Latching option requires SE-1013 Latch Assy or SE-1041 Controller Assy.

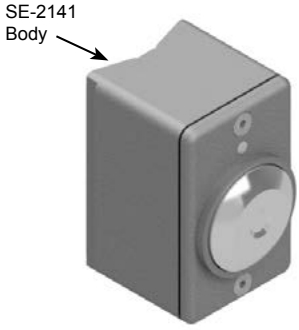

Rectangular Push Button Assy, Pole Mount, Alum Mechanical Switch

SE-2000 - [Button] - [Coating]

M=Mechanical
MLED-LCH= Mech w/ Latching LED

PNC=Process No Color
P_ _=Paint

Pole Mount

Note:
Latching option requires SE-1013 Latch Assy or SE-1041 Controller Assy.

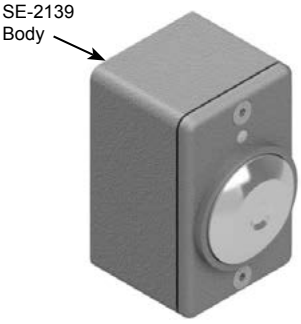

Rectangular Push Button Assy, Flat Back, Alum Mechanical Switch

SE-2001 - [Button] - [Coating]

M=Mechanical
MLED-LCH= Mech w/ Latching LED

PNC=Process No Color
P_ _=Paint

Flat Back Mount

Note:
Latching option requires SE-1013 Latch Assy or SE-1041 Controller Assy.

Note: 1. All assemblies are supplied standard with stainless steel fasteners.
2. Latching units are latched on during the "Don't Walk" cycle with the addition of the SE-1041 or SE-1013 controller.
3. See Reference Section for available paint colors.

ADA w/ Directional Arrow Mechanical Switch

Pelco has a full line of ADA compliant pedestrian push buttons and stations, mechanical and Piezo, that are available with or without LED indicators. Contact Pelco for information on additional push button assemblies not shown in the catalog.

Push Button Assy, Pole Mount, Alum Oval w/ Directional Arrow Mechanical Switch

SE-2039 - [Button] - [Arrow] - [Coating]

Button	Arrow	Coating
M=Mechanical MLED-LCH= Mech w/ Latching LED	1=Single Arrow 2=Double Arrow	PNC=Process No Color P_ _=Paint

Pole Mount

Note:
Latching option requires SE-1013 Latch Assy or SE-1041 Controller Assy.

Push Button Assy, Flat Back Mount, Alum Oval w/ Directional Arrow Mechanical Switch

SE-2040 - [Button] - [Arrow] - [Coating]

Button	Arrow	Coating
M=Mechanical MLED-LCH= Mech w/ Latching LED	1=Single Arrow 2=Double Arrow	PNC=Process No Color P_ _=Paint

Flat Back Mount

Note:
Latching option requires SE-1013 Latch Assy or SE-1041 Controller Assy.

Note: 1. All assemblies are supplied standard with stainless steel fasteners.
2. Latching units are latched on during the "Don't Walk" cycle with the addition of the SE-1041 or SE-1013 controller.
3. See Reference Section for available paint colors.

ISO 9001 www.intlcert.com

Push Button Cover Mechanical Switch

Pelco has a full line of ADA compliant pedestrian push buttons and stations, mechanical and Piezo, that are available with or without LED indicators. Contact Pelco for information on additional push button assemblies not shown in the catalog.

Cover Assy, Round Push Button Mechanical

SE-2009 - M - [ ]

Button: M
Coating: [ ]
PNC=Process No Color
P_ _=Paint

Cover Assy, Round Push Button Mechanical, Latching LED

SE-2009 - MLED - LCH - [ ]

Button: MLED
Latching: LCH
Coating: [ ]
PNC=Process No Color
P_ _=Paint

Note:
Requires SE-1013 Latch Assy or SE-1041 Controller Assy.

Cover Assy, Rectangular Push Button Mechanical

SE-2015 - M - [ ]

Button: M
Coating: [ ]
PNC=Process No Color
P_ _=Paint

Cover Assy, Rectangular Push Button Mechanical, Latching LED

SE-2015 - MLED - LCH - [ ]

Button: MLED
Latching: LCH
Coating: [ ]
PNC=Process No Color
P_ _=Paint

Note:
Requires SE-1013 Latch Assy or SE-1041 Controller Assy.

Cover Assy, Oval Push Button Mechanical w/ Directional Arrow

SE-2048 - [ ] - [ ] - [ ]

Button: [ ]
M=Mechanical
MLED-LCH= Mech w/ Latching LED
Arrow: [ ]
1=Single Arrow
2=Double Arrow
Coating: [ ]
PNC=Process No Color
P_ _=Paint

Note:
Latching option requires SE-1013 Latch Assy or SE-1041 Controller Assy.

Note: 1. All assemblies are supplied standard with stainless steel fasteners.
2. Latching units are latched on during the "Don't Walk" cycle with the addition of the SE-1041 or SE-1013 controller.
3. See Reference Section for available paint colors.

5" x 7-3/4" Station Mechanical Switch

Pelco's fixed pedestrian stations are available with attachable signs or cast legends. A wide variety of pedestrian signs, including Braille, are available in various sizes.

Push Button Station Assy, Rectangular 5" x 7-3/4" Blank Face, Alum Mechanical Switch

SE-2037 - M - [ ]

Button: M

Coating: [ ]
PNC=Process No Color
P_ _=Paint

Top View

Push Button Station Assy, Rectangular 5" x 7-3/4" Cast Legend, Alum Mechanical Switch

SE-2038 - [ ] - M - [ ] - [ ]

Sign Face: [ ]
1030
1031
1032
1039
*See Below

Button: M

Legend Color: [ ]
106=Black Ink
107=White Ink
110=Silver Ink

Coating: [ ]
PNC=Process No Color
P_ _=Paint

Top View

Push Button Station Assy, 9" x 12" Cast Legend, Alum Mechanical Switch

SE-2089 - [ ] - M - [ ] - [ ]

Sign Face: [ ]
1030
1031
1032
1039
*See Below

Button: M

Legend Color: [ ]
106=Black Ink
107=White Ink
110=Silver Ink

Coating: [ ]
PNC=Process No Color
P_ _=Paint

Legend (Ink)	Body (Paint)	Color Combination
-106	-PNC	Black on Natural
-106	-PXX	Black on Paint
-107	-PXX	Silver on Paint
-110	-PXX	Silver on Paint

*Cast Sign Face Options:

1030

Left Man/Left Arrow

1031

Right Man/Right Arrow

1032

Right Man/Double Arrow

1039

Instruction

Top View

Note: 1. All assemblies are supplied standard with stainless steel fasteners.
2. For pedestrian signs available refer to pages T8-23 through T8-25.
3. See Reference Section for available paint colors.

ISO 9001
www.intlcert.com

Modular Station Body

These unique Pelco push button stations feature a versatile modular design that provides flexability by adapting different push button cover assemblies to multiple size sign stations. The 9″ x 12″ station can easily be converted to 9″ x 15″ station by adding a 3″ x 12″ adapter kit.

SE-2142 - Size [ ] - Coating [ ]

Size: 7=5″ x 7-3/4″, 12=9″x12″, 15=9″x15″

Coating: PNC=Process No Color, P_ _=Paint

Modular Sign Station Body Assy, Alum For Round 2-Hole Push Buttons

SE-2142-7-P33

SE-2142-12-P33

SE-2142-15-P33

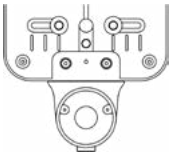

2-Hole Cover

SE-2147 - Size [ ] - Coating [ ]

Size: 7=5″ x 7-3/4″, 12=9″x12″, 15=9″x15″

Coating: PNC=Process No Color, P_ _=Paint

Modular Sign Station Body Assy, Alum For Round 4-Hole Push Button

SE-2147-7-P33

SE-2147-12-P33

SE-2147-15-P33

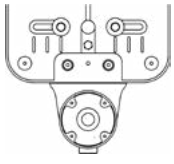

4-Hole Cover

Note: 1. All assemblies are supplied standard with stainless steel fasteners.
2. For pedestrian signs available refer to pages T8-23 through T8-25.
3. See Reference Section for available paint colors.

Modular Station Body

These unique Pelco push button stations feature a versatile modular design that provides flexability by adapting different push button cover assemblies to multiple size sign stations. The 9″ x 12″ station can easily be converted to 9″ x 15″ station by adding a 3″ x 12″ adapter kit.

SE-2144 - Size ☐ - Coating ☐

Size: 7=5″ x 7-3/4″, 12=9″x12″, 15=9″x15″

Coating: PNC=Process No Color, P_ _=Paint

Modular Sign Station Body Assy, Alum
For Oval Push Buttons w/ Directional Arrows

SE-2144-7-P33

SE-2144-12-P33

SE-2144-15-P33

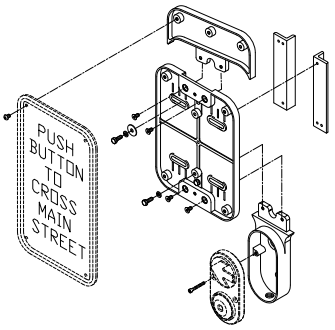

9″ x 15″ Modular Station shown
(sign and cover sold seperately)

Note: 1. All assemblies are supplied standard with stainless steel fasteners.
2. For pedestrian signs available refer to pages T8-23 through T8-25.
3. See Reference Section for available paint colors.

ISO 9001 www.intlcert.com

9" x 12" Station Adapter

Pelco's station adapter is for use with 9"x12" stations where there is a need for mounting stations at 90° from each other on a small diameter pole. Available for the round or oval push button stations.

Adapter, Double Push Button Station, 9" x 12" for Round Push Button & 4-1/2" OD Pole, Alum

SE-6042 - [ ] - [ ]

Mount: Blank=Bolt Mount, CM=Cable Mount

Coating: PNC=Process No Color, P__=Paint

Note:
For station assemblies with round push button.

Adapter, Double Push Button Station, 9" x 12" for Oval Push Button & 4-1/2" OD Pole, Alum

SE-6109 - [ ] - [ ]

Mount: Blank=Bolt Mount, CM=Cable Mount

Coating: PNC=Process No Color, P__=Paint

Note:
For station assemblies with oval push button.

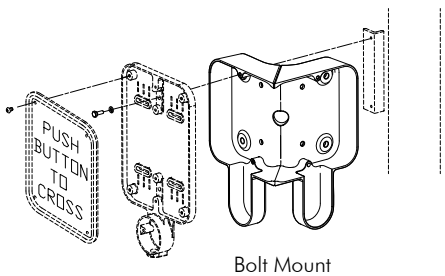

Bolt Mount

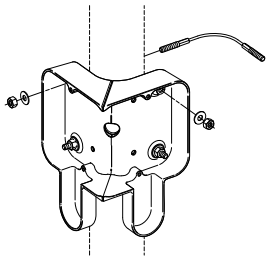

Cable Mount

Note: 1. All assemblies are supplied standard with stainless steel fasteners.
2. For pedestrian signs available refer to pages T8-23 through T8-25.
3. See Reference Section for available paint colors.

This page is intentionally left blank.

ISO 9001
www.intlcert.com

Latching Controller Assembly

The Pelco Latching Push Button Assembly provides visual confirmation to the pedestrian that a pedestrian call has been placed. An LED located on the Pedestrian Push Button illuminates when pressed, and stays illuminated until the "Walk Signal" is energized by the Traffic Controller. The Latching Push Button Controller also provides electrical isolation between the Push Buttons and Controller.

SE-1041-PNC **Controller Assy, Latching Pushbutton, Alum**

Note: Max 4 Push Buttons per Channel
Each push button channel requires two separate wires.
Common wire can not be shared between channels.

When used with Pelco's latching LED push buttons, and a pedestrian pushes a push button during the don't walk interval, the LED on all push buttons wired to that channel will come on, providing a continuous confirmation that a call has been placed to the traffic signal controller. When the walk signal comes on, the LED indication on all push buttons hooked up to that particular channel will go off.

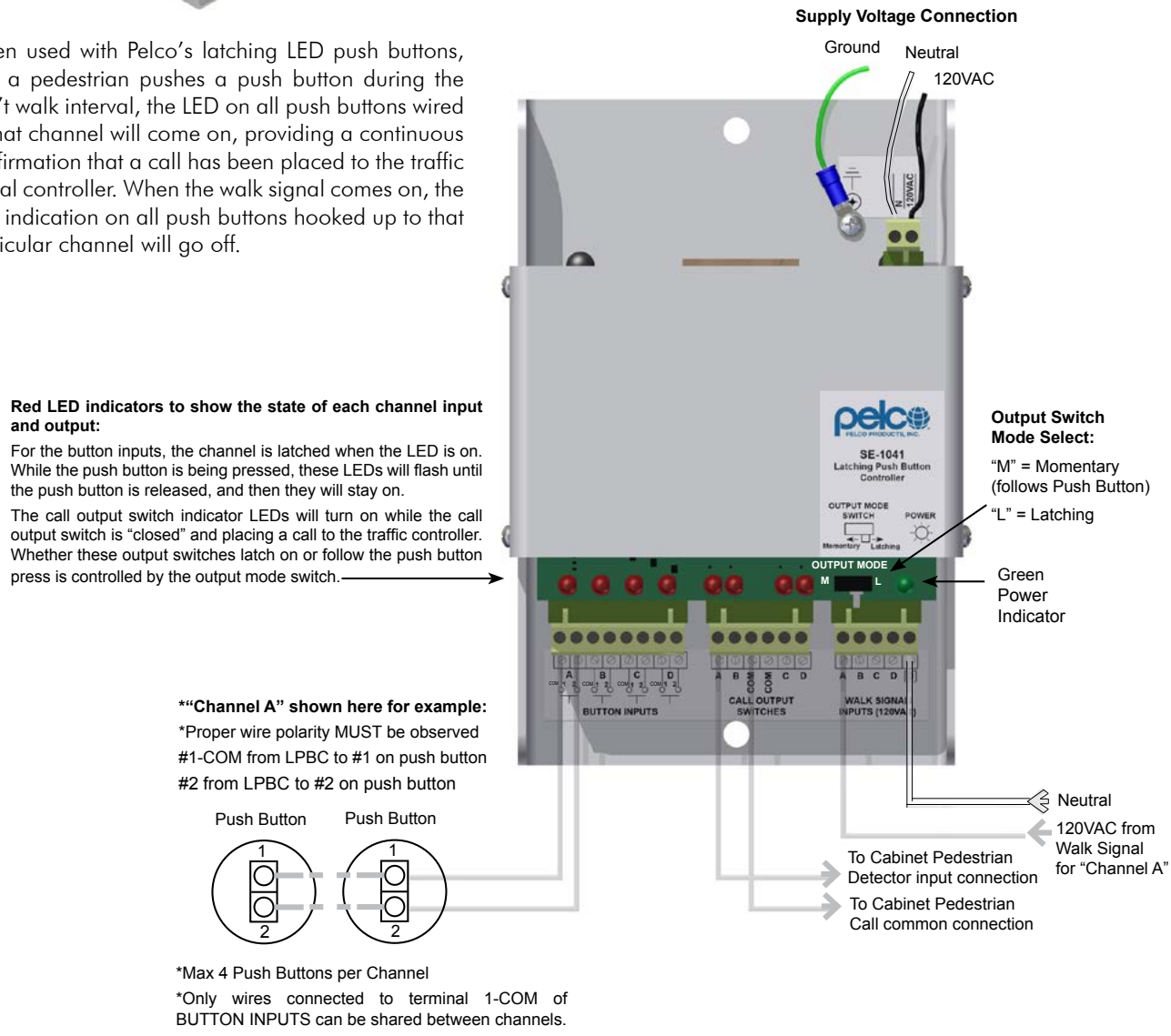

Note: 1. Refer to previous pages of this catalog section for LED push buttons or stations -LCH latching option.
2. Each channel of the 4 channel latching controller can operate up to 4 push buttons for a total of 16 push buttons per controller Assembly.

Push Button Components

Body Assy, Round Pole Mount, 2-Hole, Alum

SE-2137 - [ ] Coating

PNC=Process No Color
P_ _=Paint

Body Assy, Round Pole Mount, 4-Hole, Alum

SE-2176 - [ ] Coating

PNC=Process No Color
P_ _=Paint

Flat Back Adapter, Round Push Button, Alum

SE-0279 - [ ] Coating

PNC=Process No Color
P_ _=Paint

Body Assy, Rectangular Pole Mnt, Alum

SE-2141 - [ ] Coating

PNC=Process No Color
P_ _=Paint

Body Assy, Rectangular Flat Back, Alum

SE-2139 - [ ] Coating

PNC=Process No Color
P_ _=Paint

Body Assy, Oval Push Button Pole Mount

SE-2140 - [ ] Coating

PNC=Process No Color
P_ _=Paint

Flat Back Adapter, Oval Push Button, Alum

SE-0270 - [ ] Coating

PNC=Process No Color
P_ _=Paint

Arrow Kit, Adjustable, Oval Push Button, Alum

SE-2504 - [ ] Arrow - [ ] Coating

1=Single
2=Double

PNC=Process No Color
P_ _=Paint

Adapter Kit, Round Cover to Body, Alum

SE-2507-PNC

Note: Required for adapting round cechanical cover to older style round bodies and stations.

Note: 1. All assemblies are supplied standard with stainless steel fasteners.
2. See Reference Section for available paint colors.

Pedestrian Signs
MUTCD Compliant

R10-2a

SF-1085-[ ] - [ ] - PNC

Size: 12=9″x12″

3/8″ Mtg Holes: Blank=None; 2H=2@10″ CTC; 4H=4@7″x10″ CTC

R10-3

SF-1014-[ ] - [ ] - [ ] - PNC

Size: 7=5″x7-3/4″; 12=9″x12″

Arrow: R= Right Man/Arrow; L= Left Man/Arrow; D=Left Man/ Double Arrow

3/8″ Mtg Holes: Blank=None; 2H=2@6.75 CTC 2@10″ CTC; 4H=4@4″x6.75″CTC 4@7″x10″ CTC

R10-25

SF-1083-[ ] - [ ] - [ ] - PNC

Size: 7=5″ x 7-3/4″; 12=9″ x 12″

Arrow: R= Right Arrow; L= Left Arrow; D= Double Arrow

3/8″ Mtg Holes: Blank=None; 2H=2@6.75 CTC 2@10″ CTC; 4H=4@4″x6.75″CTC 4@7″x10″ CTC

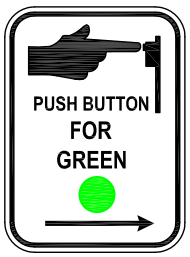

R10-4

SF-1022-[ ] - [ ] - [ ] - PNC

Size: 12=9″x12″

Arrow: R= RightArrow; L= Left Arrow; D= Double Arrow

3/8″ Mtg Holes: Blank=None; 2H=2@10″ CTC; 4H=4@7″x10″ CTC

R10-3a

SF-1006-[ ] - [ ] - [ ] - PNC

Size: 15=9″x15″

Arrow: R= Right Man/Arrow; L= Left Man/Arrow

3/8″ Mtg Holes: Blank=None; 2H=2@13″ CTC; 4H=4@7″x13″ CTC

R10-4a

SF-1027-[ ] - [ ] - [ ] - PNC

Size: 15=9″x15″

Arrow: R= Right Man/Arrow; L= Left Man/Arrow

3/8″ Mtg Holes: Blank=None; 2H=2@13″ CTC; 4H=4@7″x13″ CTC

Note: 1. Standard signs are .063″ aluminum with the exception of 9″ x 15″ signs, which are 0.080″ thick.
2. MUTCD compliant signs refer to 2009 MUTCD as set by FHWA.

Pedestrian Signs
MUTCD Compliant

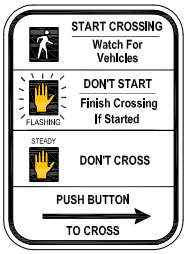

R10-3b

SF-1060- [Size] - [Arrow] - [3/8" Mtg Holes] - PNC

Size: 12=9"x12"

Arrow: R= Right Man/Arrow; L= Left Man/Arrow

3/8" Mtg Holes: Blank=None; 2H=2@10" CTC; 4H=4@7"x10" CTC

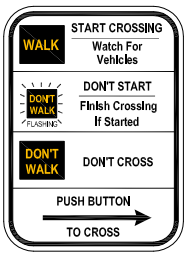

R10-3c

SF-1084- [Size] - [Arrow] - [3/8" Mtg Holes] - PNC

Size: 12=9"x12"

Arrow: R= Right Arrow; L= Left Arrow

3/8" Mtg Holes: Blank=None; 2H=2@10" CTC; 4H=4@7"x10" CTC

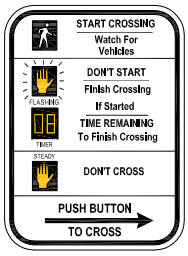

R10-3e

SF-1065- [Size] - [Arrow] - [3/8" Mtg Holes] - PNC

Size: 7=5" x 7-3/4"; 12=9" x 12"

Arrow: R= Right Arrow; L= Left Arrow; D= Double Arrow

3/8" Mtg Holes: Blank=None; 2H=2@6.75 CTC 2@10" CTC; 4H=4@4"x6.75"CTC 4@7"x10" CTC

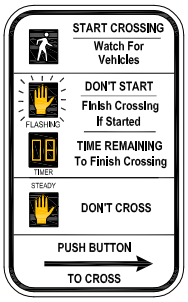

R10-3e

SF-1074- [Size] - [Arrow] - [3/8" Mtg Holes] - PNC

Size: 15=9"x15"

Arrow: R= Right Arrow; L= Left Arrow; D= Double Arrow

3/8" Mtg Holes: Blank=None; 2H=2@13" CTC; 4H=4@7"x13" CTC

R10-3i

SF-1100- [Size] - [Arrow] - [3/8" Mtg Holes] - [Streetname] - PNC

Size: 15=9" x 15"

Arrow: R= Right Arrow; L= Left Arrow; D= Double Arrow

3/8" Mtg Holes: Blank=None; 2H=2@13" CTC; 4H=4@7"x13" CTC

Streetname: Specify Street Name Required

Note: 1. Standard signs are .063" aluminum with the exception of 9" x 15" signs, which are 0.080" thick.
2. MUTCD compliant signs refer to 2009 MUTCD Standards as set by FHWA.

ISO 9001
www.intlcert.com

Pedestrian Signs
Custom

SF-1002- [Size] - [Arrow] - [3/8" Mtg Holes] - PNC

Size: 7=5" x 7-3/4", 12=9" x 12"

Arrow: R= Right Arrow, L= Left Arrow, D= Double Arrow

3/8" Mtg Holes: Blank=None, 2H=2@6.75 CTC, 2@10" CTC, 4H=4@4"x6.75"CTC, 4@7"x10" CTC

SF-1010- [Size] - [Arrow] - [3/8" Mtg Holes] - PNC

Size: 12=9" x 12"

Arrow: R= Right Man/Arrow, L= Left Man/Arrow

3/8" Mtg Holes: Blank=None, 2H=2@10" CTC, 4H=4@7"x10" CTC

SF-1018- [Size] - [Arrow] - [3/8" Mtg Holes] - PNC

Size: 7=5" x 7-3/4", 12=9" x 12"

Arrow: Blank= None, R= Right Arrow, L= Left Arrow, D= Double Arrow

3/8" Mtg Holes: Blank=None, 2H=2@6.75 CTC, 2@10" CTC, 4H=4@4"x6.75"CTC, 4@7"x10" CTC

SF-1031- [Size] - [Arrow] - [3/8" Mtg Holes] - PNC

Size: 7=5" x 7-3/4", 12=9" x 12"

Arrow: R= Right Man/Arrow, L= Left Man/Arrow, D= Right Man/ Double Arrow

3/8" Mtg Holes: Blank=None, 2H=2@6.75 CTC, 2@10" CTC, 4H=4@4"x6.75"CTC, 4@7"x10" CTC

Braille:
Push Button to Cross

SF-8065- [Size] - [Arrow] - [3/8" Mtg Holes] - PNC

Size: 7=5" x 7-3/4", 12=9" x 12", 15=9" x 15"

Arrow: B=Blank, R= Right Arrow, L= Left Arrow, D= Double Arrow

3/8" Mtg Holes: Blank=None, 2H=2@6.75 CTC, 2@10" CTC, 2@13" CTC, 4H=4@4"x6.75"CTC, 4@7"x10" CTC, 4@7"x13" CTC

Note: 1. Standard signs are .063" aluminum with the exception of 9" x 15" signs, which are 0.080" thick.
2. Custom signs are non-compliant with MUTCD standards. Additional custom signs are available upon request.

Flasher Controllers

Aluminum Flasher Cabinets are weather resistant and are available for rear, top and bottom mounting. Various brackets are available for mounting to wood or metal poles. A complete line of Type II or Police Type cabinets are available.

Flasher Controller Assy w/ 5-Pin Flasher

SE-1007
Back Panel

SE-1000 - [Mount] - [Coating]

Mount:
T=Top Mount
B=Bottom Mount
R=Rear Mount
TB=Top/Bottom Mount
TBR=Top/Bottom & Rear Mount
NM=No Mount

Coating:
PNC=Process No Color
P_ _=Paint

Top/Bottom Mount

Rear Mount

Note:
Includes Time Clock, Lightning Arrestor, Circuit Breaker & Toggle Switch.

Flasher Controller Assy w/ Nema Flasher

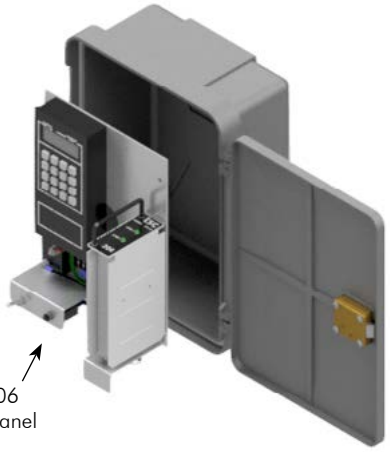

SE-1006
Back Panel

SE-1004 - [Mount] - [Coating]

Mount:
T=Top Mount
B=Bottom Mount
R=Rear Mount
TB=Top/Bottom Mount
TBR=Top/Bottom & Rear Mount
NM=No Mount

Coating:
PNC=Process No Color
P_ _=Paint

Top/Bottom Mount

Rear Mount

Note:
Includes Time Clock, Lightning Arrestor, Circuit Breaker & Toggle Switch.

Note: 1. All assemblies are supplied standard with stainless steel fasteners.
2. See Reference Section for available paint colors.

Flasher Controllers

Aluminum Flasher Cabinets are weather resistant and are available for rear, top and bottom mounting. Various brackets are available for mounting to wood or metal poles. A complete line of Type II or Police Type cabinets are available.

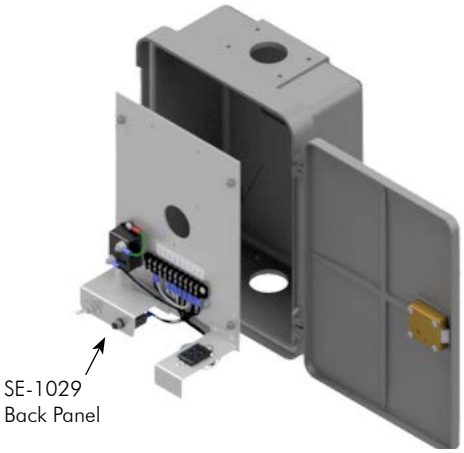

SE-1029
Back Panel

Flasher Controller Cabinet Assy w/o Time Clock, Alum

SE-1014 - [Mount] - [Flasher] - [Coating]

Mount:
T=Top Mount
B=Bottom Mount
R=Rear Mount
TB=Top/Bottom Mount
TBR=Top/Bottom & Rear Mount
NM=No Mount

Flasher:
Blank=None
F=Nema Flasher

Coating:
PNC=Process No Color
P_ _=Paint

Top/Bottom Mount

Rear Mount

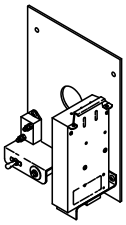

SE-1015, Backpanel with Flasher

Note:
Includes Lightning Arrestor, Circuit Breaker & Toggle Switch. Nema Flasher optional.

Flasher Cabinet Assy w/ Police Type Lock

SE-1002 - [Mount] - [Coating]

Mount:
T=Top Mount
B=Bottom Mount
R=Rear Mount
TB=Top/Bottom Mount
TBR=Top/Bottom & Rear Mount
NM=No Mount

Coating:
PNC=Process No Color
P_ _=Paint

Top/Bottom Mount

Rear Mount

Note: 1. All assemblies are supplied standard with stainless steel fasteners.
2. See Reference Section for available paint colors.

ISO 9001
www.intlcert.com

Mounting Assemblies

Aluminum Flasher Cabinets are weather resistant and are available for rear, top and bottom mounting. Various brackets are available for mounting to wood or metal poles. A complete line of Type II or Police Type cabinets are available.

SE-2518-SS
Gasket & Hardware

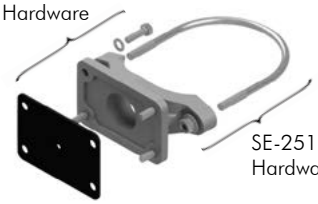

SE-2517-SS
Hardware Kit

Mounting Kit, 4" (4-1/2" OD) Post

SE-1100 - [ ] Coating

PNC=Process No Color
P_ _=Paint

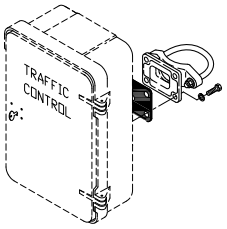

Mounting Kit, 3" (3-1/2" OD) Post

SE-1101 - [ ] Coating

PNC=Process No Color
P_ _=Paint

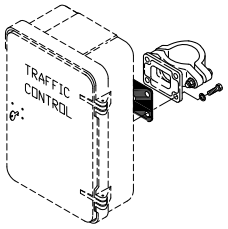

Mounting Kit, Wood Pole w/ 1-1/2" Single Hub & Closure Plate

SE-1103 - [ ] Coating

PNC=Process No Color
P_ _=Paint

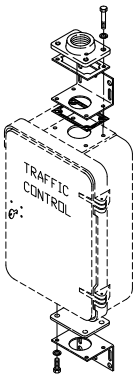

Mounting Kit, Sweep Elbows

SE-1104 - [ ] Coating

PNC=Process No Color
P_ _=Paint

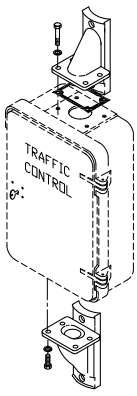

Note: 1. All assemblies are supplied standard with stainless steel fasteners.
2. See Reference Section for available paint colors.

Type I & Type IB Police Lock

Aluminum Flasher Cabinets are weather resistant and are available for rear, top and bottom mounting. Various brackets are available for mounting to wood or metal poles. A complete line of Type II or Police Type cabinets are available.

Cabinet Lock, Police Type I

Keys

SM-1012 - ☐ - BRS

0K=Lock Only
1SK=Lock w/ 1 Short Key
2SK=Lock w/ 2 Short Keys
1LK=Lock w/ 1 Long Key
2LK=Lock w/ 2 Long Keys

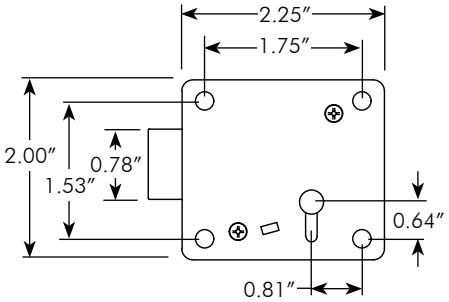

SM-0109-BRS **Short Key, Type I Cabinet Lock, 1-3/4″**

SM-0200-BRS **Long Key, Type I Cabinet Lock, 2-5/8″**

Cabinet Lock, Type IB

Keys

SM-1021 - ☐ - BRS

0K=Lock Only
1SK=Lock w/ 1 Short Key
2SK=Lock w/ 2 Short Keys

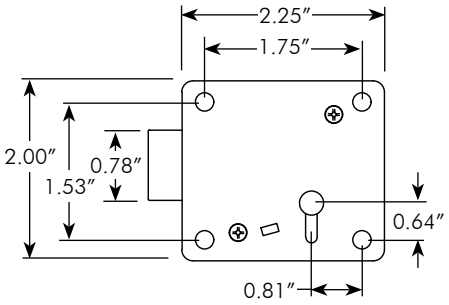

SM-0213-PNC **Short Key, Type IB Cabinet Lock, 1-3/4″**

Note: 1. Specify key options when ordering.

Type II Tumbler Lock

Aluminum Flasher Cabinets are weather resistant and are available for rear, top and bottom mounting. Various brackets are available for mounting to wood or metal poles. A complete line of Type II or Police Type cabinets are available.

Cabinet Lock, Type II Square Latch

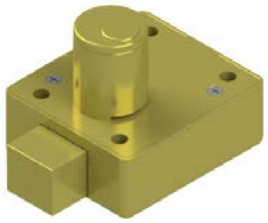

SM-1026 - [Keys] - BRS

OK=Lock Only
1K=Lock w/ 1 Key
2K=Lock w/ 2 Keys

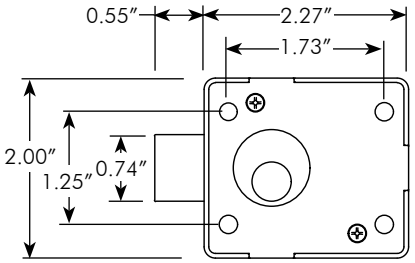

Note:
Right hand shown, left hand opposite.

Cabinet Lock, Type II Tapered Latch

SM-1023 - [Keys] - BRS

OK=Lock Only
1K=Lock w/ 1 Key
2K=Lock w/ 2 Keys

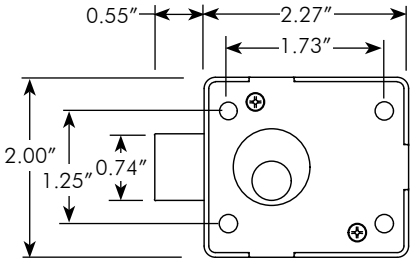

Note:
Right hand shown, left hand opposite.

SM-0198-2-CRM **Key, Type II Cabinet Lock**

SM-0198-B-CRM **Blank Key, Type II Cabinet Lock**

Note: 1. Unless otherwise specified, all locks will be provided to fit a Type II Key. All locks can be supplied with other key configurations upon request at an additional charge.

Vacuum Formed ABS

Pelco's vacuum formed backplates are fabricated from black ABS UV stabilized plastic sheeting with a 3" corner radius and a 5/8" flange on all sides. Backplates with reflective borders have a smooth finish on front side, while non-reflective backplates have a haircell finish on front. Backplates are designed to precisely fit each manufacturers' signal head and are supplied with necessary mounting hardware.

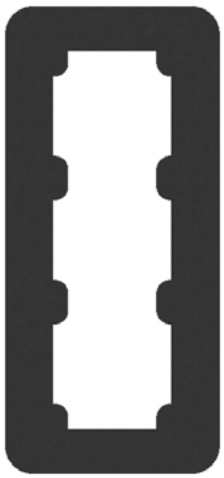

BK-1003-SERIES
12", 3-Section
EXAMPLE

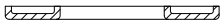

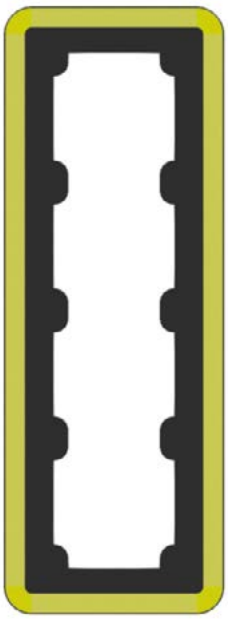

BK-1004-RT2 SERIES
12", 4-Section w/ Reflective Tape
EXAMPLE

BK-1000 Series
Straight Backplates,
Vacuum Formed ABS Plastic, .125"

	1000 Series		Signal Manufacturer		Reflective Borders	
BK -	[1]	-	[ ]	-	[ ]	- PNC
	See Below		See Below		Blank=No Tape RT2= 2" Reflective Tape	

Note:
Use charts below to specify part number, ie., BK-1003-A-PNC

STRAIGHT BACKPLATES		
Signal Size	No. of Sections	1000 Series Vacuum Formed ABS
8"	1	BK-1012
8"	3	BK-1006
12"	1	BK-1001
12"	2	BK-1002
12"	3	BK-1003
12"	4	BK-1004
12"	5	BK-1005

SIGNAL MANUFACTURER	
Siemens/Automatic (poly)	A
Siemens/Eagle (poly)	E
Siemens/MarkIV (alum)	F
Peek/TCT	C
McCain	N
Fortran	FT
Econolite 2002 (poly)	L3
Econolite 2002 (alum)	L4
Walker Brothers	WB

Note:
1. Backplates for all Signal Manufacturers may not be available.

Vacuum Formed ABS

Pelco's vacuum formed backplates are fabricated from black ABS UV stabilized plastic sheeting with a 3" corner radius and a 5/8" flange on all sides. Backplates with reflective borders have a smooth finish on front side, while non-reflective backplates have a haircell finish on front. Backplates are designed to precisely fit each manufacturers' signal head and are supplied with necessary mounting hardware.

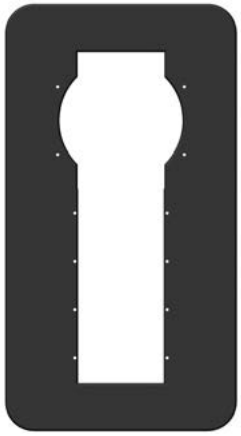

BK-1011-SERIES
12"-8"-8", 3-Section
EXAMPLE

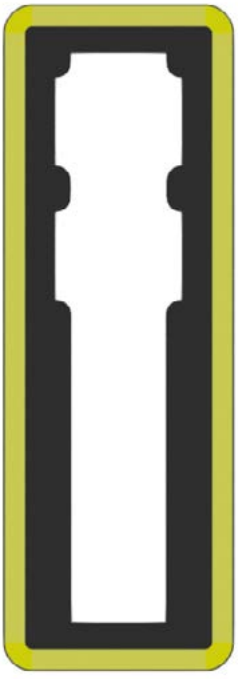

BK-1014-RT2 SERIES
12"-12"-8"-8"-8", 5-Section w/ Reflective Tape
EXAMPLE

BK-1000 Series Combination Backplates, Vacuum Formed ABS Plastic, .125"

	1000 Series		Signal Manufacturer		Reflective Borders	
BK -	[1]	-	[ ]	-	[ ]	- PNC
	See Below		See Below		Blank=No Tape RT2= 2" Reflective Tape	

Note:
Use charts below to specify part number, ie., BK-1011-A-PNC

COMBINATION BACKPLATES		
Signal Size	No. of Sections	1000 Series Vacuum Formed ABS
12"-8"-8"	3	BK-1011
12"-12"-8"-8"-8"	5	BK-1014

SIGNAL MANUFACTURER	
Siemens/Automatic (poly)	A
Siemens/Eagle (poly)	E
Siemens/Mark IV (alum)	F
Peek/TCT	C
McCain	N
Fortran	FT
Econolite 2002 (poly)	L3
Econolite 2002 (alum)	L4
Walker Brothers	WB

Note:
1. Backplates for all Signal Manufacturers may not be available.

ISO 9001 www.intlcert.com

Vacuum Formed ABS

Pelco's vacuum formed backplates are fabricated from black ABS UV stabilized plastic sheeting with a 3" corner radius and a 5/8" flange on all sides. Backplates with reflective borders have a smooth finish on front side, while non-reflective backplates have a haircell finish on front. Backplates are designed to precisely fit each manufacturers' signal head and are supplied with necessary mounting hardware.

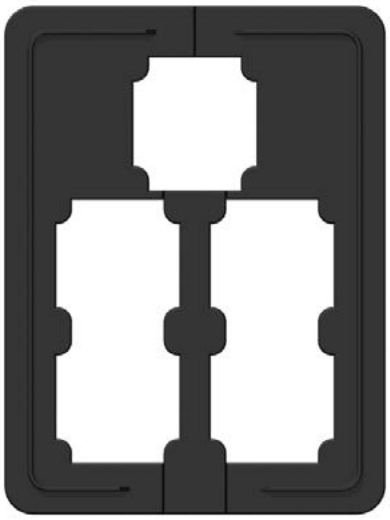

BK-1007-SERIES
5-Section Cluster
EXAMPLE

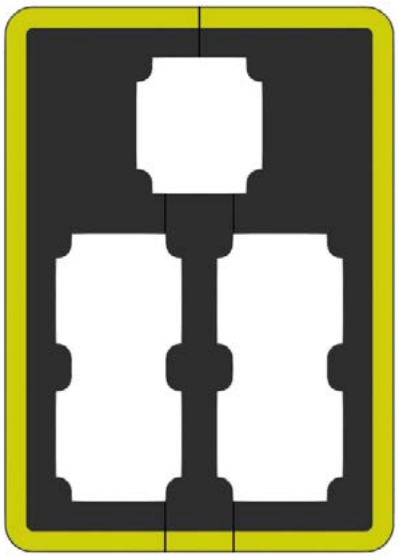

BK-1010-RT2 SERIES
5-Section Cluster w/ Reflective Tape
EXAMPLE

BK-1000 Series Cluster Backplates, Vacuum Formed ABS Plastic, .125"

BK - [1000 Series: See Below] - [Signal Manufacturer: See Below] - [Reflective Borders: Blank=No Tape, RT2= 2" Reflective Tape] - PNC

Note:
Use charts below to specify part number, ie., BK-1007-A-PNC

CLUSTER BACKPLATES			
Signal Size	No. of Sections	1000 Series Vacuum Formed ABS	Mounting Application
12" / 12" 12" / 12" 12"	5	BK-1007	AS-0109 Astro-Brac 16" CTC
12" / 12" 12" / 12" 12"	5	BK-1010	Span Wire 16-1/2" CTC
12" / 12" 12" / 12" 12"	5	BK-1021	Span Wire Casting 17" CTC
12" / 12" 12" / 12" 12"	5	BK-1015	Plumbizer Mount 17" CTC
12" 12" / 12"	3	BK-1032	AS-0167 or AS-0168 Astro-Brac 17" CTC
12" 12" / 12"	3	BK-1034	Plumbizer Mount 17" CTC

SIGNAL MANUFACTURER	
Siemens/Automatic (poly)	A
Siemens/Eagle (poly)	E
Siemens/Mark IV (alum)	F
Peek/TCT	C
McCain	N
Fortran	FT
Econolite 2002 (poly)	L3
Econolite 2002 (alum)	L4
Walker Brothers	WB

Note:
1. Backplates for all Signal Manufacturers may not be available.

Louvered Vacuum Formed ABS

Pelco's louvered vacuum formed backplates are fabricated from black ABS UV stabilized plastic sheeting with a 3" corner radius, 5/8" flange on all sides, with a haircell finish on the front side. Backplates are designed to precisely fit each manufacturers' signal head and are supplied with necessary mounting hardware.

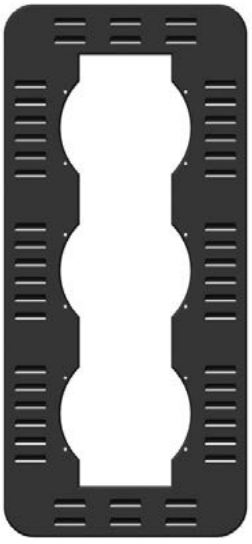

BK-5003-SERIES
12", 3-Section
EXAMPLE

BK-5000 Series
Louvered Straight Backplates, Vacuum Formed ABS Plastic, .125"

BK - [5000 Series: 5] - [Signal Manufacturer:] - PNC

Note:
Use charts below to specify part number, ie., BK-5003-A-PNC

STRAIGHT BACKPLATES		
Signal Size	No. of Sections	5000 Series Vacuum Formed ABS
12"	3	BK-5003
12"	4	BK-5004
12"	5	BK-5005

SIGNAL MANUFACTURER	
Siemens/Automatic (poly)	A
Siemens/Eagle (poly)	E
Siemens/Mark IV (alum)	F
Peek/TCT	C
McCain	N
Fortran	FT
Econolite 2002 (poly)	L3
Econolite 2002 (alum)	L4
Walker Brothers	WB

Note: 1. Backplates for all Signal Manufacturers may not be available.
2. Reflective tape not available on louvered backplates.

ISO 9001 www.intlcert.com

Louvered Vacuum Formed ABS

Pelco's louvered vacuum formed backplates are fabricated from black ABS UV stabilized plastic sheeting with a 3" corner radius, 5/8" flange on all sides, with a haircell finish on the front side. Backplates are designed to precisely fit each manufacturers' signal head and are supplied with necessary mounting hardware.

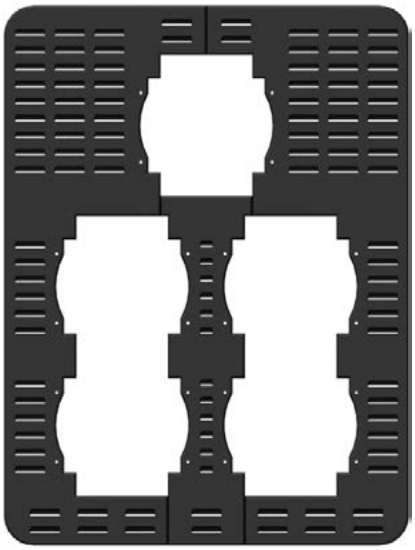

BK-5021-SERIES
5-Section
EXAMPLE

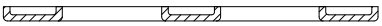

BK-5000 Series
Louvered 5-Section Cluster Backplates, Vacuum Formed ABS Plastic, .125"

	5000 Series		Signal Manufacturer	
BK -	5	-		- PNC

Note:
Use charts below to specify part number, ie., BK-5021-A-PNC

CLUSTER BACKPLATES			
Signal Size	No. of Sections	1000 Series Vacuum Formed ABS	Mounting Application
12" / 12" 12" / 12" 12"	5	BK-5007	AS-0109 Astro-Brac 16" CTC
12" / 12" 12" / 12" 12"	5	BK-5010	Span Wire 16-1/2" CTC
12" / 12" 12" / 12" 12"	5	BK-5021	Span Wire Casting 17" CTC

SIGNAL MANUFACTURER	
Siemens/Automatic (poly)	A
Siemens/Eagle (poly)	E
Siemens/Mark IV (alum)	F
Peek/TCT	C
McCain	N
Fortran	FT
Econolite 2002 (poly)	L3
Econolite 2002 (alum)	L4
Walker Brothers	WB

Note: 1. Backplates for all Signal Manufacturers may not be available.
2. Reflective tape not available on louvered backplates.

Split Backplates

Split backplates allow for easy installation without removing the signal from its mounting bracketry. Backplates are fabricated from black ABS UV stabilized plastic sheeting with a 3" corner radius and a 5/8" flange on all sides. Backplates with reflective borders have a smooth finish on front side, while non-reflective backplates have a haircell finish on front. Backplates are designed to precisely fit each manufacturers' signal head and are supplied with necessary mounting hardware.

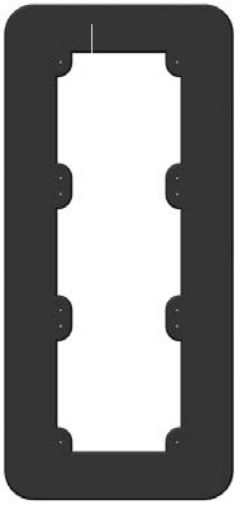

BK-4003-SERIES
12", 3-Section Split
EXAMPLE

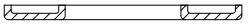

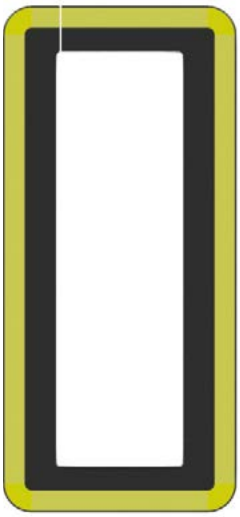

BK-4003-RT2 SERIES
3-Section Split w/ Reflective Tape
EXAMPLE

BK-4000 Series
Vaccum Formed, .125"

	4000 Series		Signal Manufacturer		Reflective Borders	
BK -	[4]	-	[ ]	-	[ ]	- PNC
	See Below		See Below		Blank=No Tape RT2= 2" Reflective Tape	

Note:
Use charts below to specify part number, ie., BK-4003-A-PNC

STRAIGHT BACKPLATES		
Signal Size	No. of Sections	4000 Series Vacuum Formed ABS
12"	1	BK-4001
12"	3	BK-4003
12"	4	BK-4004
12"	5	BK-4005
8"	3	BK-4006
12"	3	BK-4503 Louvered
12"	4	BK-4504 Louvered
12"	5	BK-4505 Louvered
12" / 12" 12" / 12" 12"	5	BK-4009

SIGNAL MANUFACTURER	
Siemens/Automatic (poly)	A
Siemens/Eagle (poly)	E
Siemens/Mark IV (alum)	F
Peek/TCT	C
McCain	N
Fortran	FT
Econolite 2002 (poly)	L3
Econolite 2002 (alum)	L4
Walker Brothers	WB

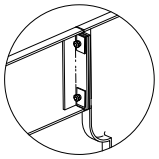

Backplate Split

Note: 1. Backplatess for all Signal Manufacturers may not be available.

ISO 9001
www.intlcert.com

www.pelcoinc.com - sales@pelcoinc.com - 405-340-3434 - fax: 405-340-3435

Flat ABS

Flat backplates are fabricated from black ABS UV stabilized plastic sheet with hair cell finish on front side, smooth finish on back side, and 3" corner radii. Backplates are designed to precisely fit each manufacturers' signal head and are supplied with necessary mounting hardware.

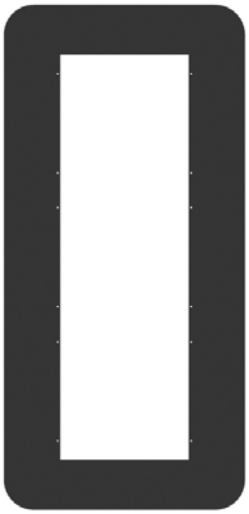

BK-2008-SERIES
12", 3-Section
EXAMPLE

BK-2000 Series Straight Backplates, Flat ABS Plastic, .156"

BK - [2000 Series: 2] - [Signal Manufacturer:] - PNC

Note:
Use charts below to specify part number, ie., BK-2008-A-PNC

STRAIGHT BACKPLATES		
Signal Size	No. of Sections	2000 Series Flat ABS
8"	1	BK-2001
8"	2	BK-2002
8"	3	BK-2003
8"	4	BK-2004
8"	5	BK-2005
12"	1	BK-2006
12"	2	BK-2007
12"	3	BK-2008
12"	4	BK-2009
12"	5	BK-2010

SIGNAL MANUFACTURER	
Siemens/Automatic (poly)	A
Siemens/Eagle (poly)	E
Siemens/MarkIV (alum)	F
Peek/TCT	C
McCain	N
Fortran	FT
Econolite 2002 (poly)	L3
Econolite 2002 (alum)	L4
Walker Brothers	WB

Note: 1. Flat polycarbonate backplates are available upon request. Contact Pelco for backplate options not shown.
2. Backplates for all Signal Manufacturers may not be available.

Flat ABS

Flat backplates are fabricated from black ABS UV stabilized plastic sheet with hair cell finish on front side, smooth finish on back side, and 3" corner radii. Backplates are designed to precisely fit each manufacturers' signal head and are supplied with necessary mounting hardware.

BK-2013-SERIES
12"-8"-8"-8", 4-Section
EXAMPLE

BK-2000 Series Combination Backplates, Flat ABS Plastic, .156"

BK - [2] - [ ] - PNC

(2000 Series; Signal Manufacturer)

Note:
Use charts below to specify part number, ie., BK-2013-A-PNC

COMBINATION BACKPLATES		
Signal Size	No. of Sections	2000 Series Vacuum Flat ABS
12"-8"-8"	3	BK-2012
12"-8"-8"-8"	4	BK-2013
12"-12"-8"-8"-8"	4	BK-2014
12"-12"-8"-8"-8"	5	BK-2017

SIGNAL MANUFACTURER	
Siemens/Automatic (poly)	A
Siemens/Eagle (poly)	E
Siemens/Mark IV (alum)	F
Peek/TCT	C
McCain	N
Fortran	FT
Econolite 2002 (poly)	L3
Econolite 2002 (alum)	L4
Walker Brothers	WB

Note: 1. Flat polycarbonate backplates are available upon request. Contact Pelco for backplate options not shown.
2. Backplates for all Signal Manufacturers may not be available.

ISO 9001 www.intlcert.com

Flat ABS

Flat backplates are fabricated from black ABS UV stabilized plastic sheet with hair cell finish on front side, smooth finish on back side, and 3" corner radii. Backplates are designed to precisely fit each manufacturers' signal head and are supplied with necessary mounting hardware.

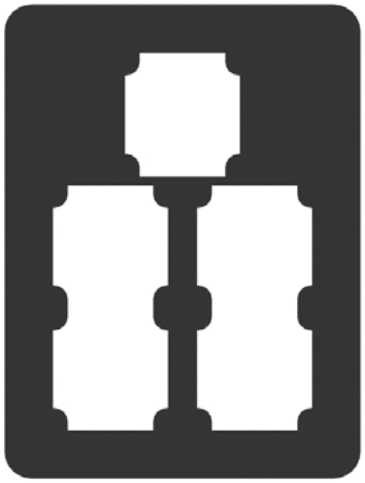

BK-2011-SERIES
12", 5-Section Cluster
EXAMPLE

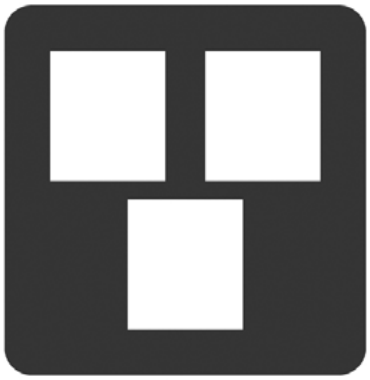

BK-2032-SERIES
12", 3-Section Cluster
EXAMPLE

BK-2000 Series Cluster Backplates, Flat ABS Plastic, .156"

BK - [2000 Series: 2] - [Signal Manufacturer:] - PNC

Note:
Use charts below to specify part number, ie., BK-2011-A-PNC

CLUSTER BACKPLATES			
Signal Size	No. of Sections	2000 Series Vacuum Flat ABS	Mounting Application
12" / 12" 12" / 12" 12"	5	BK-2011	AS-0109 Astro-Brac 16" CTC
12" / 12" 12" / 12" 12"	5	BK-2023	Span Wire 16-1/2" CTC
12" / 12" 12" / 12" 12"	5	BK-2024	Span Wire Casting 17" CTC
12" 12" / 12"	3	BK-2032	Plumbizer Mount 17" CTC

SIGNAL MANUFACTURER	
Siemens/Automatic (poly)	A
Siemens/Eagle (poly)	E
Siemens/Mark IV (alum)	F
Peek/TCT	C
McCain	N
Fortran	FT
Econolite 2002 (poly)	L3
Econolite 2002 (alum)	L4
Walker Brothers	WB

Note: 1. Flat polycarbonate backplates are available upon request. Contact Pelco for backplate options not shown.
2. All Signal Manufacturers may not be available.

Hardware Kits

BK-0101-SS **Hardware Kit, Backplate, Stainless**

Note: 1. Kit includes: 12 #8 x 3/4" Screws, 12 Locknuts, 24 Rectangular Washers
2. Hardware Kits are used with A, F, C, L3, WB backplates.

BK-0113-SS **Hardware Kit, Split Backplate, Stainless**

Note: 1. Kit includes: 2 #8 x 3/4" Screws, 2 Locknuts, 4 Rectangular Washers
2. Hardware Kits are used with A, E, C, N, F, L4 split backplates.

BK-0117-SS **Hardware Kit, Backplate, Stainless**

Note: 1. Kit includes: 12 #8 x 7/8" Screws, 12 Locknuts, 24 Rectangular Washers
2. Hardware Kits are used with L4 backplates.

BK-0108-SS **Hardware Kit, Backplate, Stainless**

Note: 1. Kit includes: 12 #8 x 1/2" Screws, 12 Rectangular Washers
2. Hardware Kits are used with E backplates.

BK-0110-SS **Hardware Kit, Backplate, Stainless**

Note: 1. Kit includes: 12 #10 x 1/2" Screws, 12 Rectangular Washers
2. Hardware Kits are used with N, FT backplates.

BK-0106-PNC **Hardware Kit, Backplate**

Note: 1. Kit includes: 8 #10 x 1/2" Screws, 8 #8 Tinnerman Nuts
2. Hardware Kits are used with A, E, F, C, N, L3, L4 backplates.

SIGNAL MANUFACTURER	
Siemens/Automatic (poly)	A
Siemens/Eagle (poly)	E
Siemens/Mark IV (alum)	F
Peek/TCT	C
McCain	N
Fortran	FT
Econolite 2002 (poly)	L3
Econolite 2002 (alum)	L4
Walker Brothers	WB

ISO 9001
www.intlcert.com

Pedestal Poles

Pelco offers aluminum, iron, and plastic bases in various sizes as well as poles in aluminum and steel. Pelco's cast aluminum square base is FHWA certified and meets or exceeds AASHTO break-away requirements. Plastic replacement doors offer an economical way to deter vandalism.

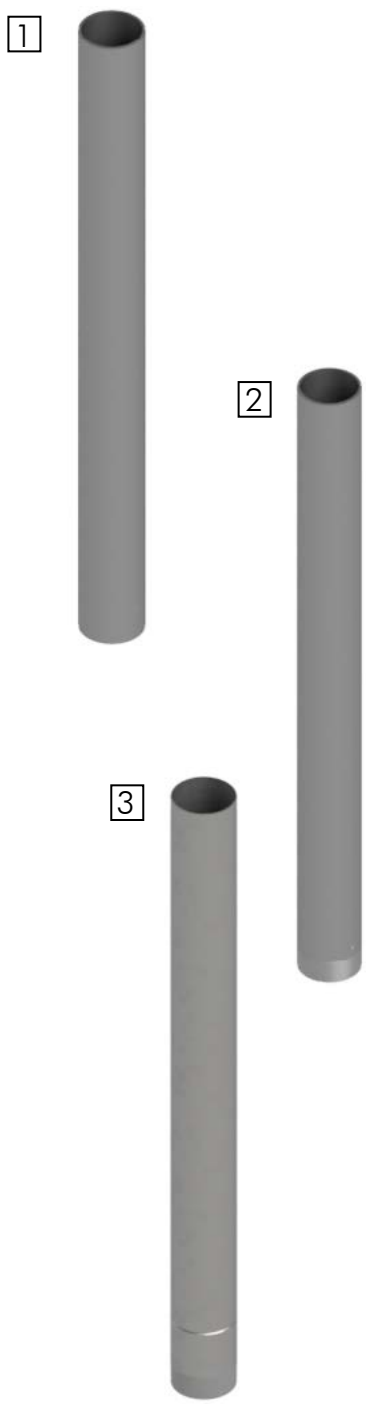

1. **Pedestal Pole, 4" Sch 40, Spun Alum No Threads**

PB-5101 - Length [ ] - Coating [ ]

PNC=Process No Color
P_ _=Paint

2. **Pedestal Pole, 4"- 8 NPT Sch 40, Spun Alum w/ Pelican ID**

PB-5100 - Length [ ] - Coating [ ]

PNC=Process No Color
P_ _=Paint

Pedestal Pole, 4"- 8 NPT Sch 80, Spun Alum

PB-5102 - Length [ ] - Coating [ ]

PNC=Process No Color
P_ _=Paint

Pedestal Pole, 4"- 8 NPT Sch 40, Steel

PB-5201 - Length [ ] - Coating [ ]

P_ _=Paint

Pedestal Pole, 4"- 8 NPT Sch 40, Galv Steel

PB-5200 - Length [ ] - GLV - Coating [ ]

Blank=Galvanized Only
P_ _=Paint over Galvanized

3. **Pedestal Pole, Welded, 4"- 8 NPT w/ 5-1/2" Nipple Length, Steel**

PB-5219 - Length [ ] - Coating [ ]

GLV=Galvanized
P_ _=Paint

Note: 1. Standard poles are typically sold in 1 foot increments. For other lengths contact sales.
2. See Reference Section for available paint colors.

ISO 9001 www.intlcert.com

Square Pedestal Bases
Aluminum

Pelco offers aluminum, iron, and plastic bases in various sizes as well as poles in aluminum and steel. Pelco's PB-5334 and PB-5335 cast aluminum square bases are FHWA certified and meets or exceeds AASHTO break-away requirements. Plastic replacement doors offer an economical way to deter vandalism.

Square Base Assembly, Alum w/ Alum Door

PB-5334 - [Door] - [Set Screws in Collar] - [Grounding Lug] - [Coating]

- Door: NL=No Logo; Blank=Pelco Logo
- Set Screws in Collar: 1S=1 Hex Bolt; 3S=3 Set Screws; Blank=None
- Grounding Lug: GL=Ground Lug; Blank=None
- Coating: PNC=Process No Color; P_ _=Paint

Square Base Assembly, Alum w/ Plastic Door

PB-5335 - [Door] - [Set Screws in Collar] - [Grounding Lug] - PNC

- Door: NL=No Logo; Blank=Pelco Logo
- Set Screws in Collar: 1S=1 Hex Bolt; 3S=3 Set Screws; Blank=None
- Grounding Lug: GL=Ground Lug; Blank=None

Square Base Assembly, Alum Heat Treated w/ Alum Door

PB-5336 - [Door] - [Set Screws in Collar] - [Grounding Lug] - [Coating]

- Door: NL=No Logo; Blank=Pelco Logo
- Set Screws in Collar: 1S=1 Hex Bolt; 3S=3 Set Screws; Blank=None
- Grounding Lug: GL=Ground Lug; Blank=None
- Coating: PNC=Process No Color; P_ _=Paint

Square Base Assembly, Alum Heat Treated w/ Plastic Door

PB-5337 - [Door] - [Set Screws in Collar] - [Grounding Lug] - PNC

- Door: NL=No Logo; Blank=Pelco Logo
- Set Screws in Collar: 1S=1 Hex Bolt; 3S=3 Set Screws; Blank=None
- Grounding Lug: GL=Ground Lug; Blank=None

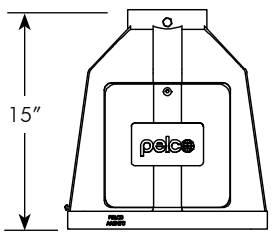

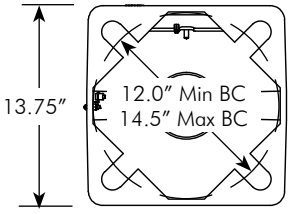

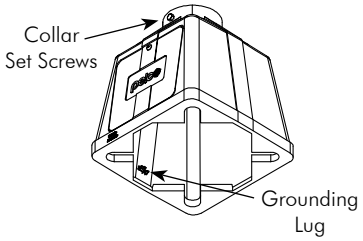

Note: 1. PB-5334 and PB-5335 aluminum square bases above are available with AASHTO certifications and FHWA approval. Please specify by adding the Certification Part No. C-1001 in addition to the base part number.
2. All assemblies are supplied standard with stainless fasteners.
3. See Reference Section for available paint colors.

ISO 9001 www.intlcert.com

Square Pedestal Bases
Aluminum

Pelco offers aluminum, iron, and plastic bases in various sizes as well as poles in aluminum and steel. Pelco's PB-5334 and PB-5335 cast aluminum square bases are FHWA certified and meets or exceeds AASHTO break-away requirements. Plastic replacement doors offer an economical way to deter vandalism.

Square Base Assembly, Alum Steel Coupling w/ Alum Door

PB-5340 - [Door] - [Set Screws in Collar] - [Grounding Lug] - [Coating]

- Door: NL=No Logo, Blank=Pelco Logo
- Set Screws in Collar: 1S=1 Hex Bolt, 3S=3 Set Screws, Blank=None
- Grounding Lug: GL=Ground Lug, Blank=None
- Coating: PNC=Process No Color, P_ _=Paint

Square Base Assembly, Alum Steel Coupling w/ Plastic Door

PB-5341 - [Door] - [Set Screws in Collar] - [Grounding Lug] - PNC

- Door: NL=No Logo, Blank=Pelco Logo
- Set Screws in Collar: 1S=1 Hex Bolt, 3S=3 Set Screws, Blank=None
- Grounding Lug: GL=Ground Lug, Blank=None

Square Base Assembly, Alum Slip Fit w/ Alum Door

PB-5338 - [Door] - [Grounding Lug] - [Coating]

- Door: NL=No Logo, Blank=Pelco Logo
- Grounding Lug: GL=Ground Lug, Blank=None
- Coating: PNC=Process No Color, P_ _=Paint

Square Base Assembly, Alum Slip Fit w/ Plastic Door

PB-5339 - [Door] - [Grounding Lug] - PNC

- Door: NL=No Logo, Blank=Pelco Logo
- Grounding Lug: GL=Ground Lug, Blank=None

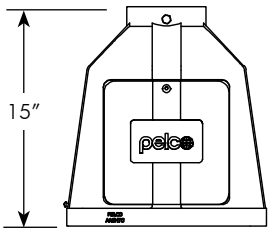

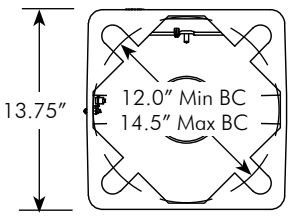

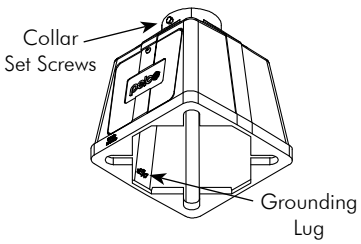

Note: 1. All assemblies are supplied standard with stainless fasteners.
2. See Reference Section for available paint colors.

Square Pedestal Bases
Iron

Pelco offers aluminum, iron, and plastic bases in various sizes as well as poles in aluminum and steel. Pelco's PB-5334 and PB-5335 cast aluminum square bases are FHWA certified and meets or exceeds AASHTO break-away requirements. Plastic replacement doors offer an economical way to deter vandalism.

Square Base Assembly, Iron w/ Iron Door

PB-5308 - [ ] - [ ] - [ ]

Set Screws in Collar	Grounding Lug	Coating
1S=1 Hex Bolt 3S=3 Set Screws Blank=None	GL=Grounding Lug Blank=None	GLV=Galvanized P_ _=Paint

Square Base Assembly, Iron w/ Iron Door

PB-5511 - [ ] - [ ] - [ ]

Set Screws in Collar	Grounding Lug	Coating
1S=1 Hex Bolt 3S=3 Set Screws Blank=None	GL=Grounding Lug Blank=None	GLV=Galvanized P_ _=Paint

Note:
"Buy American" Certification available upon request at time of order.

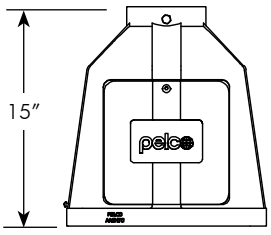

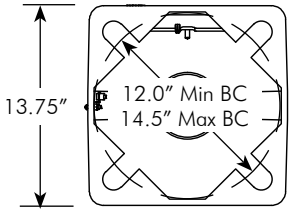

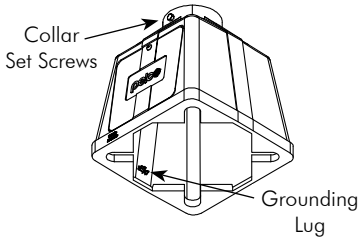

Note: 1. All assemblies are supplied standard with stainless fasteners.
2. See Reference Section for available paint colors.

ISO 9001
www.intlcert.com

www.pelcoinc.com - sales@pelcoinc.com - 405-340-3434 - fax: 405-340-3435

Octagonal Pedestal Bases
Aluminum

Pelco offers aluminum, iron, and plastic bases in various sizes as well as poles in aluminum and steel. Pelco's PB-5334 and PB-5335 cast aluminum square bases are FHWA certified and meets or exceeds AASHTO break-away requirements. Plastic replacement doors offer an economical way to deter vandalism.

Octagonal Base Assembly, Alum w/ Alum Door

PB-5349 - [Set Screws in Collar] - [Grounding Lug] - [Coating]

Set Screws in Collar	Grounding Lug	Coating
1S=1 Hex Bolt 4S=4 Set Screws Blank=None	GL=Grounding Lug Blank=None	PNC=Process No Color P_ _=Paint

Octagonal Base Assembly, Alum Slip Fit w/ Alum Door

PB-5350 - [Grounding Lug] - [Coating]

Grounding Lug	Coating
GL=Grounding Lug Blank=None	PNC=Process No Color P_ _=Paint

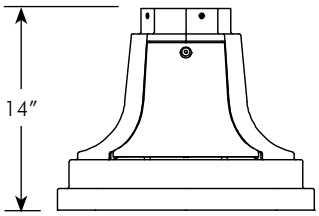

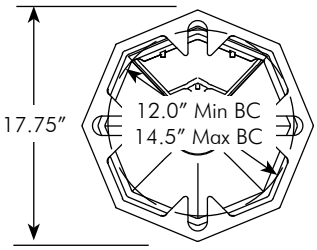

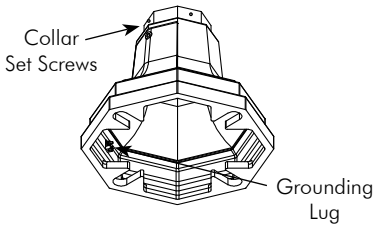

Note: 1. All assemblies are supplied standard with stainless fasteners.
2. See Reference Section for available paint colors.

Octagonal Pedestal Bases
Iron

Pelco offers aluminum, iron, and plastic bases in various sizes as well as poles in aluminum and steel. Pelco's PB-5334 and PB-5335 cast aluminum square bases are FHWA certified and meets or exceeds AASHTO break-away requirements. Plastic replacement doors offer an economical way to deter vandalism.

Octagonal Base Assembly, Iron w/ Iron Door

	Set Screws in Collar		Grounding Lug		Coating
PB-5310 -	[ ]	-	[ ]	-	[ ]
	1S=1 Hex Bolt 4S=4 Set Screws Blank=None		GL=Grounding Lug Blank=None		GLV=Galvanized P_ _=Paint

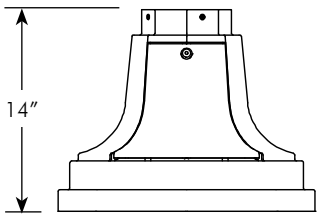

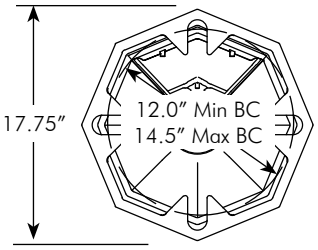

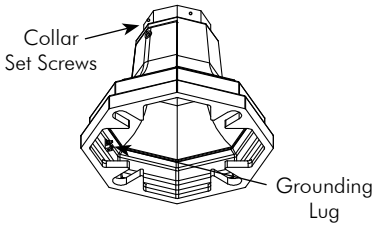

Note: 1. All assemblies are supplied standard with stainless fasteners.
2. See Reference Section for available paint colors.

ISO 9001
www.intlcert.com

Pedestal Bases

Pelco offers aluminum, iron, and plastic bases in various sizes as well as poles in aluminum and steel. Pelco's PB-5334 and PB-5335 cast aluminum square bases are FHWA certified and meets or exceeds AASHTO break-away requirements. Plastic replacement doors offer an economical way to deter vandalism.

2-Piece Base for 4-1/2" OD Pole, Plastic

PB-5303-PNC

Note:
High Density Crosslinkable Polyethylene Pedestal Pole Base.
Complete with all hardware. No anchor bolts required.

2-Piece Reducer, Alum

PB-5328-PNC

Note:
2-Piece Aluminum Reducer for PB-5303-PNC Base. (Reduces 4-1/2" OD to 3-1/2" OD)

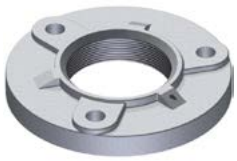

Flange Base, 4"-8NPT, Galv Iron

PB-5304-GLV

Note:
Three 13/16" mounting holes on 7-1/4" bolt circle.

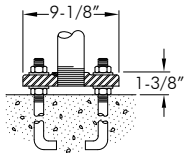

Typical Application

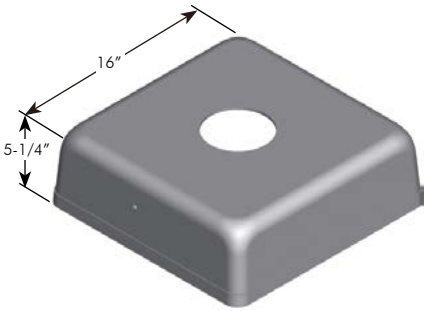

2-Piece Square Cover, Alum

PB-5399 - [Pole Diameter] - [Coating]

Pole Diameter: 4.5=4.5" OD, 8=8" OD

Coating: PNC=Process No Color, P__=Paint

Note:
For 4-1/2" - 8" OD Pole (15" Max. Bottom Opening). Complete with all hardware.

Note: 1. All assemblies are supplied standard with stainless fasteners.
2. See Reference Section for available paint colors.

Pole & Arm Caps

Pelco offers pole and arm caps in various sizes in both aluminum and steel. Caps for 4-1/2" OD posts are available in aluminum and ABS plastic.

Pole Cap, Acorn Type, Alum, 3" OD Pole

PB-5403 - [ ] Coating

PNC=Process No Color
P__=Paint

Pole Cap, Acorn Type, Alum, 3-1/2" OD Pole

PB-5407 - [ ] Coating

PNC=Process No Color
P__=Paint

Pole Cap, Acorn Type, Alum, 4-1/2" OD Pole

PB-5401 - [ ] Coating

PNC=Process No Color
P__=Paint

Pole Cap, Dome Type, Alum, 4-1/2" OD Pole

PB-5402 - [ ] Coating

PNC=Process No Color
P__=Paint

Note: 1. All assemblies are supplied standard with stainless fasteners.
2. See Reference Section for available paint colors.

Pole & Arm Caps

Pelco offers pole and arm caps in various sizes in both aluminum and steel. Caps for 4-1/2″ OD posts are available in aluminum and ABS plastic.

Pole & Arm Cap, Alum

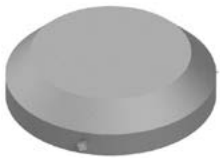

AP-0101 - Coating [ ] **2-5/16″ to 3-1/2″ OD Pole**
PNC=Process No Color
P_ _=Paint

AP-0102 - Coating [ ] **3″ to 4″ OD Pole**
PNC=Process No Color
P_ _=Paint

AP-0103 - Coating [ ] **4-3/16″ to 5-3/16″ OD Pole**
PNC=Process No Color
P_ _=Paint

AP-0104 - Coating [ ] **5-3/16″ to 6-3/16″ OD Pole**
PNC=Process No Color
P_ _=Paint

AP-0105 - Coating [ ] **6-1/8″ to 7-1/8″ OD Pole**
PNC=Process No Color
P_ _=Paint

AP-0106 - Coating [ ] **7-3/16″ to 8-1/4″ OD Pole**
PNC=Process No Color
P_ _=Paint

AP-0107 - Coating [ ] **8-3/16″ to 9-3/16″ OD Pole**
PNC=Process No Color
P_ _=Paint

AP-0108 - Coating [ ] **9-7/16″ to 10-7/16″ OD Pole**
PNC=Process No Color
P_ _=Paint

Note: 1. All assemblies are supplied standard with stainless fasteners.
2. See Reference Section for available paint colors.

Pole & Arm Caps

Pelco offers pole and arm caps in various sizes in both aluminum and steel. Caps for 4-1/2" OD posts are available in aluminum and ABS plastic.

AP-0109 - Coating [ ]

Pole & Arm Cap, Alum
10-11/16" to 11-11/16" OD Pole

PNC=Process No Color
P__=Paint

AP-0110 - Coating [ ]

Pole & Arm Cap, Alum
11-7/8" to 12-11/16" OD Pole

PNC=Process No Color
P__=Paint

AP-0450 - Pole Diameter [ ] - Coating [ ]

Pole Cap, Steel

P__=Paint

13.25=12.57"-13.38" OD
14.25=13.39"-14.38" OD
15.25=14.39"-15.38" OD
16.25=15.39"-16.38" OD
17.25=16.39"-17.38" OD
18.25=17.39"-18.38" OD
19.25=18.39"-19.38" OD
20.25=19.39"-20.38" OD
21.25=20.39"-21.38" OD
22.25=21.39"-22.38" OD
23.25=22.39"-23.38" OD
24.25=23.39"-24.38" OD

SH-1608 - Coating [ ]

Post Top Cap, 4" (4-1/2" OD Pole)
for Extruded Sign Blade, Alum

PNC=Process No Color
P__=Paint

SH-1615 - Coating [ ]

Post Top Cap, 4" (4-1/2" OD Pole)
for Flat Sign Blade, , Alum

PNC=Process No Color
P__=Paint

AP-0805-PNC

Pole Cap, ABS Plastic
for up to 4" OD Pole

AP-0806-PNC

Pole Cap, ABS Plastic
for up to 5" OD Pole

Note: 1. All assemblies are supplied standard with stainless fasteners.
2. Specify options when ordering.
3. See Reference Section for available paint colors.

ISO 9001 www.intlcert.com

POLES & BASES

PELCO PRODUCTS, INC.

Collars & Adapters

Pole and base collar assemblies, for both square and octagonal bases, are available in highwind areas to add strength and help prevent loosening of connection.

Pole & Base Collar Assembly, Alum Square Base

PB-5325 - [ ] Coating

PNC=Process No Color
P_ _=Paint

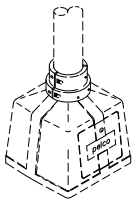

Pole & Base Collar Assembly, Alum Octagonal Base

PB-5326 - [ ] Coating

PNC=Process No Color
P_ _=Paint

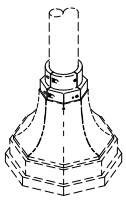

Pedestal Adapter, 4" (4-1/2" OD Pole), Alum 6-1/2" Bolt Circle

SE-3104 - [ ] Coating

PNC=Process No Color
P_ _=Paint

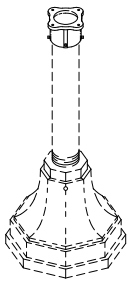

Note: 1. All assemblies are supplied standard with stainless steel fasteners.
2. Specify options when ordering.
3. See Reference Section for available paint colors.

Anchor Bolt Sets

Pelco's galvanized anchor bolt sets are available in a variety of sizes.

Anchor Bolt Set of 4 w/ Hardware 1/2"-13NC x 7-1/2", Galv

AP-1046-GLV

Note: Includes 4 Bolts, 8 Washers, and 8 Nuts.

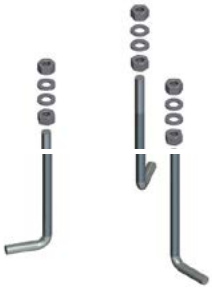

Anchor Bolt Set of 3 w/Hardware 3/4"-10NC x 18", Galv

PB-5305-GLV

Note: Includes 3 Bolts, 6 Washers and 6 Nuts.

Anchor Bolt Set of 4 w/ Hardware 3/4"-10NC x 18", Galv

PB-5306-GLV
Note: Includes 4 each: Bolts, Washers and Nuts.

PB-5518-GLV
Note: Includes 4 Bolts, 8 Washers and 8 Nuts.

Anchor Bolt Set of 4 w/ Plate Washers 3/4"-10NC x 18", Galv

PB-5371-GLV

Includes 4 Bolts, 4 Plate Washers, 4 Washers, and 4 Nuts.

Anchor Bolt Set of 4 w/ Hardware 1"-8NC x 36", Galv

Template

AP-1007- [ ] -GLV

1=12" Bolt Circle
2=12.75" Bolt Circle
3=11" Bolt Circle

Includes 4 Bolts, 4 Lock Washers, 8 Washers, and 8 Nuts.

Note: 1. All assemblies are supplied standard with galvanized fasteners.

ISO 9001
www.intlcert.com

Anchor Bolt Cages

Anchor bolt cages allow the critical bolt circle dimensions to be maintained when the steel is cast into the concrete. These cages may be used instead of anchor bolt sets.

Anchor Bolt Cage, Galv
1/2"-13NC x 7-1/2" w/ 36" Rebar
5-1/2" Bolt Circle

AP-1049-GLV

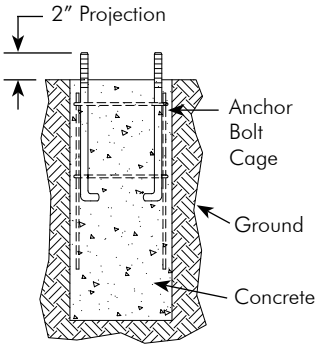

Typical Footing Detail

Anchor Bolt Cage, Galv
3/4"-10NC x 18" w/ 36" Rebar
8-1/2" Bolt Circle

AP-1089-GLV

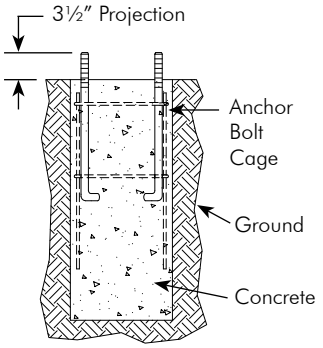

Typical Footing Detail

Anchor Bolt Cage, Galv
3/4"-10NC x 18" w/ 36" Rebar
13" Bolt Circle

AP-1095-GLV

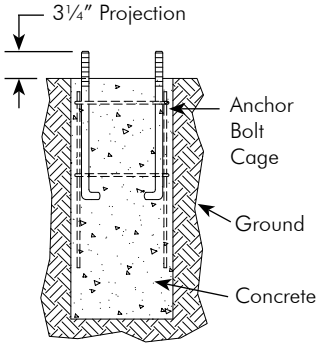

Typical Footing Detail

Note: 1. All assemblies are supplied standard with galvanized fasteners.
2. Footing shall be determined by end user.

Anchor Bolt Cages

Anchor bolt cages allow the critical bolt circle dimensions to be maintained when the steel is cast into the concrete. These cages may be used instead of anchor bolt sets.

Anchor Bolt Cage, Galv
1"-8NC x 36"
15" Bolt Circle

AP-3136-GLV

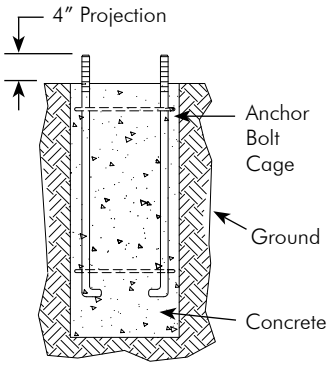

Typical Footing Detail

Anchor Bolt Cage, Galv
1"-8NC x 36"
11" Bolt Circle,

AP-3129-GLV

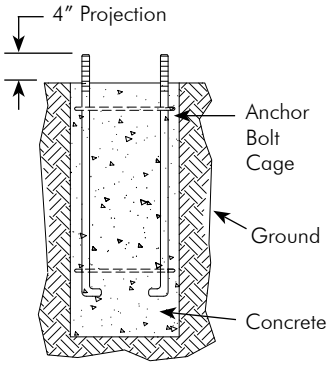

Typical Footing Detail

Note: 1. All assemblies are supplied standard with galvanized fasteners.
2. Footing shall be determined by end user.

Pole & Base Accessories

Pelco offers various accessories for pedestal bases from grounding lugs to plastic hand hole covers.

PB-5323-PNC **Grounding Lug w/ Mounting Hardware**

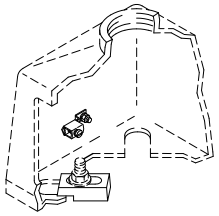

PB-0532-PNC **Anchor Bolt Adapter, Alum**

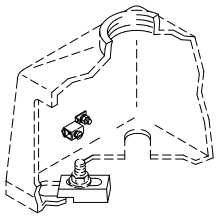

PB-0602-GLV **Shim, 1/16" x 2" x 2", Steel, Galv**

PB-0603-GLV **Shim, 1/8" x 2" x 2", Steel, Galv**

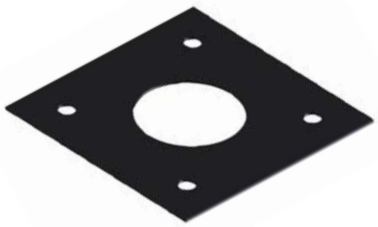

PB-0550-PNC **Template, ABS Plastic 13" Bolt Circle for Square and Octagonal Bases**

PB-5356-PNC **Universal Hand Hole Cover, ABS Plastic fits 2-3/4" x 4-1/2" to 5" x 8"**

Note: 1. All assemblies are supplied standard with stainless steel fasteners.
2. Specify options when ordering.

Plastic Replacement Doors

Plastic replacement doors for lighting pole bases are fabricated from tough hi-density UV inhibited plastic which offers excellent impact resistance. They give the appearance of aluminum, never needing painted and are a significant deterrent to vandalism since they have no scrap value. Pelco's doors withstand temperature extremes of -78° to +150° fahrenheit.

Transformer Door, Plastic

PB-0522 - [ ] - PNC

Base Manufacturer

*See Chart

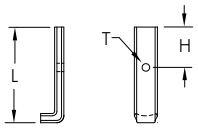

Door Latch

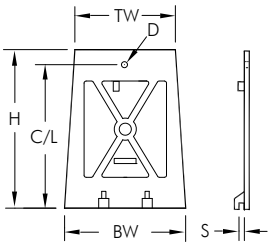

*BASE MFG	DESCRIPTION	S	C/L	DOOR SIZE H	DOOR SIZE TW	DOOR SIZE BW	HOLE D	LATCH L	LATCH H	LATCH T
03	Valmont, Flat	5/16"	12-5/8"	13-3/4"	7-15/16"	9-1/4"	3/8"	N/A	N/A	N/A
04	Union Metal, Flat	5/16"	13-5/16"	13-15/16"	7-59/64"	9-1/4"	3/8"	N/A	N/A	N/A

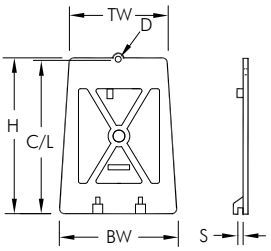

*BASE MFG	DESCRIPTION	S	C/L	DOOR SIZE H	DOOR SIZE TW	DOOR SIZE BW	HOLE D	LATCH L	LATCH H	LATCH T
05-06	Valmont-Akron, Flat (TB-1AF, TB-2AF, TB-3AF)	1/4"	13-1/2"	13-1/4"	9-1/8"	9-1/2"	3/8"	N/A	N/A	N/A
07	A.B. Chance, Flat	3/8"	13-5/16"	13-7/8"	9-1/16"	9-13/16"	3/8"	N/A	N/A	N/A
12	Hapco, Flat (56631, 56632)	5/16"	13-5/8"	13-7/16"	9-1/8"	9-5/8"	3/8"	N/A	N/A	N/A
19	P & K, C-98612, Flat (M-81)	3/8"	16-21/32"	16-1/2"	10-1/2"	13-1/2"	11/32"	N/A	N/A	N/A

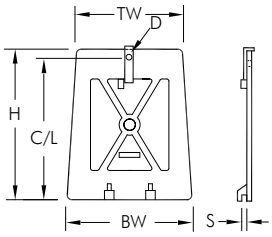

*BASE MFG	DESCRIPTION	S	C/L	DOOR SIZE H	DOOR SIZE TW	DOOR SIZE BW	HOLE D	LATCH L	LATCH H	LATCH T
01	Kaiser, Curved w/ Latch	3/8"	13-3/4"	14-7/8"	10-5/8"	11-3/4"	11/32"	4-5/8"	1-3/4"	5/16"-18
08	P & K, Flat w/ Latch (TB2A, TB2C, TB5C)	1/4"	11-7/8"	13-1/4"	8-1/4"	9-15/16"	11/32"	3-1/4"	1-3/4"	5/16"-18
15	Akron, Flat w/ Latch (TB-20S)	1/4"	12"	13-3/8"	9-1/8"	9-5/8"	5/16"	3-3/8"	1-7/8"	1/4"- 20
16	Akron, Flat Short w/ Latch (TB-17S)	5/16"	11-1/8"	11-23/32"	9-1/8"	9-5/8"	5/16"	2-3/8"	1-1/8"	1/4"- 20
22	Akron, Curved w/ Latch (FP-5190)	3/8"	12"	13-5/16"	8-1/2"	9-1/2"	11/32"	3-1/4"	1-3/4"	5/16"-18

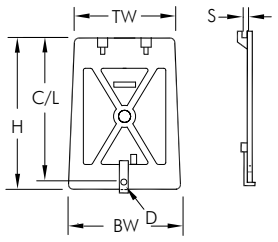

*BASE MFG	DESCRIPTION	S	C/L	DOOR SIZE H	DOOR SIZE W	DOOR SIZE BW	HOLE D	LATCH L	LATCH H	LATCH T
10	P & K, Flat w/ Latch (REVERSED OPENING TB-1, TB-2)	9/16"	12"	13-3/8"	8-3/8"	9-5/8"	11/32"	3-1/4"	1-3/4"	5/16"-18

Note: 1. All assemblies are supplied standard with stainless fasteners.
2. Doors w/latches include latch & vandal-resistant screw. Doors without latches are shipped without hardware.
3. Specify options when ordering.

ISO 9001 www.intlcert.com

Plastic Replacement Doors

Plastic replacement doors for lighting pole bases are fabricated from tough hi-density UV inhibited plastic which offers excellent impact resistance. They give the appearance of aluminum, never needing painted and are a significant deterrent to vandalism since they have no scrap value. Pelco's doors withstand temperature extremes of -78° to +150° fahrenheit.

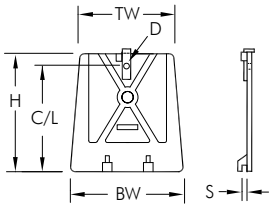

*BASE MFG	DESCRIPTION	S	C/L	DOOR SIZE H	W	BW	HOLE D	LATCH L	H	T
11	P & K, Flat Short w/ Latch (TB-4)	5/16"	9-13/16"	11-1/8"	9-9/16"	11-5/8"	11/32"	3-1/4"	1-3/4"	5/16"-18

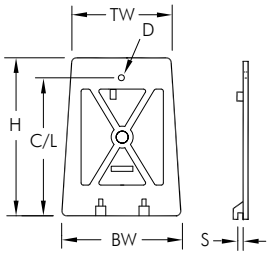

*BASE MFG	DESCRIPTION	S	C/L	DOOR SIZE H	TW	BW	HOLE D	LATCH L	H	T
13	Valmont, Flat	5/16"	12-15/16"	13-7/8"	7-15/16"	9-1/4"	3/8"	N/A	N/A	N/A
25	FAB, Flat	5/16"	12-7/8"	13-5/8"	8-1/2"	9-3/4"	5/16"	N/A	N/A	N/A

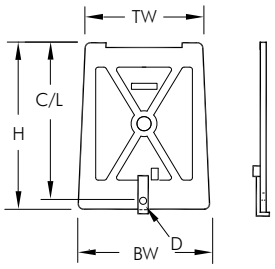

*BASE MFG	DESCRIPTION	S	C/L	DOOR SIZE H	W	BW	HOLE D	LATCH L	H	T
18	Akron, Flat, Hinged w/ Latch (REVERSE OPENING TB-17H)	N/A	10-3/16"	11-5/8"	9-1/8"	9-11/16"	5/16"	3-3/8"	1-7/8"	1/4"- 20

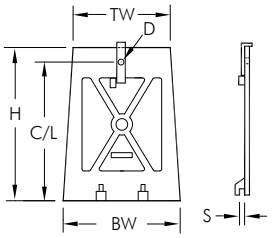

*BASE MFG	DESCRIPTION	S	C/L	DOOR SIZE H	W	BW	HOLE D	LATCH L	H	T
24	Union Metal, Flat w/ Latch	5/16"	3-5/16"	13-3/4"	7-59/64"	9-1/4"	13/32"	3-3/8"	11/16"	3/8"-16

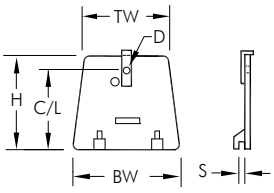

*BASE MFG	DESCRIPTION	S	C/L	DOOR SIZE H	W	BW	HOLE D	LATCH L	H	T
14	P & K, Curved, Small w/ Latch (HBS-6)	7/32"	4-1/2"	5-1/4"	5-3/16"	6"	9/32"	2-3/8"	1-1/8"	1/4"- 20

Note: 1. All assemblies are supplied standard with stainless fasteners.
2. Doors w/latches include latch & vandal-resistant screw. Doors without latches are shipped without hardware.
3. Specify options when ordering.

Transformer Bases

Pelco's Transformer bases stand 17" tall and comes complete with an aluminum Pelco door and 8 heavy duty galvanized steel washers. A transformer base hardware kit is optional.

Transformer Base , TB2-17, Alum w/ Pelco Door & Galvanized Washers

PB-5514 - [Hardware Kit] - [Coating]

Hardware Kit: Blank=None, HK=Hardware Kit

Coating: PNC=Process No Color, P_ _=Paint

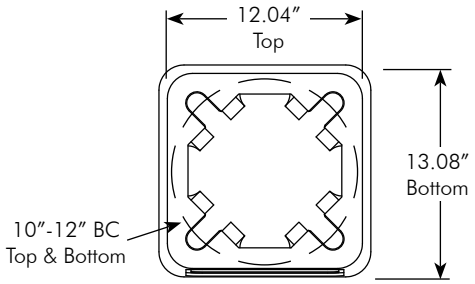

Transformer Base , TB1-17, Alum w/ Pelco Door & Galvanized Washers

PB-5517 - [Hardware Kit] - [Coating]

Hardware Kit: Blank=None, HK=Hardware Kit

Coating: PNC=Process No Color, P_ _=Paint

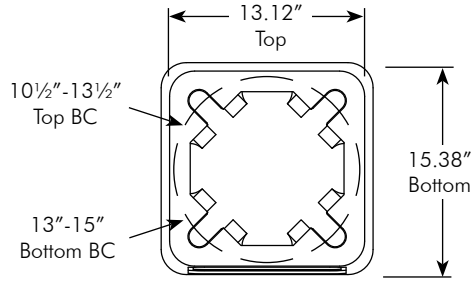

Note: 1. Hardware kits are galvanized steel.
2. See Reference Section for available paint colors.

ISO 9001 www.intlcert.com

Transformer Bases

Pelco's Transformer bases stand 17" tall and comes complete with an aluminum Pelco door and 8 heavy duty galvanized steel washers. A transformer base hardware kit is optional.

Transformer Base , TB1-17 Modified, Alum w/ Pelco Door & Galvanized Washers

PB-5538 - [ ] - [ ]

Hardware Kit: Blank=None, HK=Hardware Kit

Coating: PNC=Process No Color, P_ _=Paint

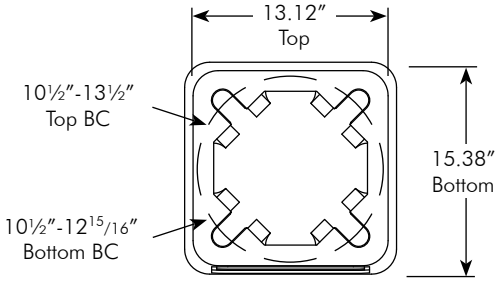

Hardware Kit , Transformer Base 1"-8NC x 4", Set of 4, Galvanized

PB-5437-GLV

Note:
For mounting base plates to the top ofTransformer Bases.
Includes 4 Hex Head Bolts, 8 Washers, 4 Lock Washers, and 4 Hex Nuts.

Note: 1. Hardware kits are galvanized steel.
2. See Reference Section for available paint colors.

Ornamental Pole Top & Bases

Pelco's decorative pole top and bases make the traffic signal aesthetically pleasing to the eye. In addition to the standar 4-piece, Pelco also manufactures the bases with an easy access door. Available for various pole diameters and with multiple finish options.

Ornamental Pole Top, Cast Alum, 5-1/4" - 24-1/4" Diameter Pole (36" in Height)

PB-5315 - [Cap Size] - [Trim Color] - [Coating]

Cap Size	Trim Color	Coating
5.25 thru 24.25	T_ _=Paint	PNC=Process No Color P_ _=Paint

Note:
Cap Size available in 1" increments.

Ornamental Pole Base, 4-Piece Cast Alum, 8" - 12" Diameter Pole (27" Footprint)

PB-5354 - [Pole Diameter] - [Trim Color] - [Coating]

Pole Diameter	Trim Color	Coating
8.00 thru 12.00	T_ _=Paint	PNC=Process No Color P_ _=Paint

Ornamental Pole Base, 4-Piece Cast Alum, 12" - 16" Diameter Pole (30" Footprint)

PB-5355 - [Pole Diameter] - [Trim Color] - [Coating]

Pole Diameter	Trim Color	Coating
12.00 thru 16.00	T_ _=Paint	PNC=Process No Color P_ _=Paint

Ornamental Pole Base, 4-Piece Cast Alum, 10" - 26" Diameter Pole (40" Footprint)

PB-5381 - [Pole Diameter] - [Coating]

Pole Diameter	Coating
10.00 thru 26.00	PNC=Process No Color P_ _=Paint

Note: 1. All assemblies are supplied standard with stainless hardware.
2. Contact Pelco for a complete Ornamental product catalog.
3. See Reference Section for available paint colors.

ISO 9001 www.intlcert.com

Ornamental Pole Top & Bases

Pelco's decorative pole top and bases make the traffic signal aesthetically pleasing to the eye. In addition to the standard 4-piece, Pelco also manufactures the bases with an easy access door. Available for various pole diameters and with multiple finish options.

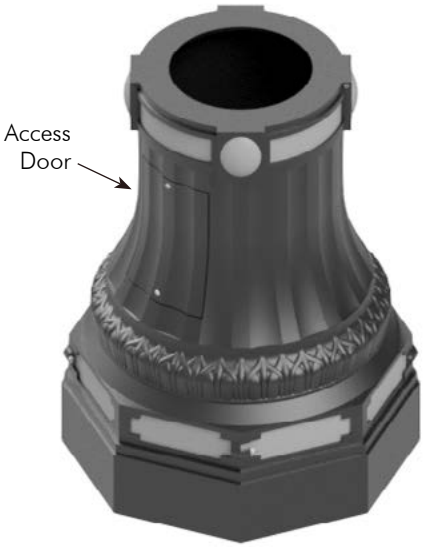

Ornamental Pole Base w/ Access Door, 4-Piece Cast Alum, 8" - 12" Diameter Pole (27" Footprint)

PB-5509 - [Pole Diameter] - [Trim Color] - [Coating]

- Pole Diameter: 8.00 thru 12.00
- Trim Color: T_ _=Paint
- Coating: PNC=Process No Color; P_ _=Paint

Ornamental Pole Base w/ Access Door, 4-Piece Cast Alum, 12" - 16" Diameter Pole (30" Footprint)

PB-5510 - [Pole Diameter] - [Trim Color] - [Coating]

- Pole Diameter: 12.00 thru 16.00
- Trim Color: T_ _=Paint
- Coating: PNC=Process No Color; P_ _=Paint

Ornamental Pole Base w/ Access Door, 4-Piece Cast Alum, 10" - 26" Diameter Pole (40" Footprint)

PB-5519 - [Pole Diameter] - [Coating]

- Pole Diameter: 10.00 thru 26.00
- Coating: PNC=Process No Color; P_ _=Paint

Note: 1. All assemblies are supplied standard with stainless hardware.
2. Contact Pelco for a complete Ornamental product catalog.
3. See Reference Section for available paint colors.

ISO 9001 www.intlcert.com

Pole & Arm Clamps

Pelco's strain pole clamps are available in various sizes and configurations from 1-way to 4-way. All clamps are hot dip galvanized per ASTM A123.

AP-1052-GLV **Strain Pole Clamp Assy, 1-Way 5-1/2" - 7-1/2" Dia Pole, Steel**

AP-1003-GLV **Strain Pole Clamp Assy, 1-Way 7-1/2" - 10-1/2" Dia Pole, Steel**

AP-1051-GLV **Strain Pole Clamp Assy, 1-Way 10-1/2" - 13-1/2" Dia Pole, Steel**

AP-1004-GLV **Strain Pole Clamp Assy, 2-Way 7-1/2" - 10-1/2" Dia Pole, Steel**

AP-1113-GLV **Strain Pole Clamp Assy, 2-Way 10-1/2" -13-1/2" Dia Pole, Steel**

AP-1152-GLV **Strain Pole Clamp Assy, 2-Way 13-1/2" - 16-1/2" Dia Pole, Steel**

AP-1005-GLV **Strain Pole Clamp Assy, 3-Way 7-1/2" - 10-1/2" Dia Pole, Steel**

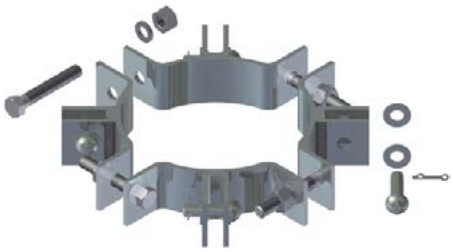

AP-1006-GLV **Strain Pole Clamp Assy, 4-Way 7-1/2" - 10-1/2" Dia Pole, Steel**

Note: All assemblies are supplied standard with galvanized hardware.

Pole & Arm Clamps

Pelco's strain pole clamps are available in various sizes and configurations from 1-way to 4-way. All clamps are hot dip galvanized per ASTM A123.

AP-1053-GLV **Strain Pole Clamp Assy, 2-Piece w/ Eyelet 7-1/2" - 8-1/4" Dia Pole, Steel**

AP-1054-GLV **Strain Pole Clamp Assy, 2-Piece w/ Eyelet 8-1/4" - 8-3/4" Dia Pole, Steel**

AP-1055-GLV **Strain Pole Clamp Assy, 2-Piece w/ Eyelet 9" - 10" Dia Pole, Steel**

AP-1056-GLV **Strain Pole Clamp Assy, 2-Piece w/ Eyelet 10" - 11" Dia Pole, Steel**

AP-1072-GLV **Strain Pole Clamp Assy, 2-Piece w/ Eyelet 10-3/4" - 11-3/4" Dia Pole, Steel**

AP-1057-GLV **Strain Pole Clamp Assy, 2-Piece w/ Eyelet 12" - 13" Dia Pole, Steel**

AP-1122-GLV **Strain Pole Clamp Assy, 2-Way 2-Piece w/ Eyelet 7-1/2" - 8-1/4" Dia Pole, Steel**

Note: All assemblies are supplied standard with galvanized hardware.

ITC Access Compartments

Pelco's ITC, Integral Terminal Compartment and Hand Hole, is an industry standard that has a low profile and unobstructed opening. The fold-out terminal plate provides for easier wiring access. Available with three terminal block options.

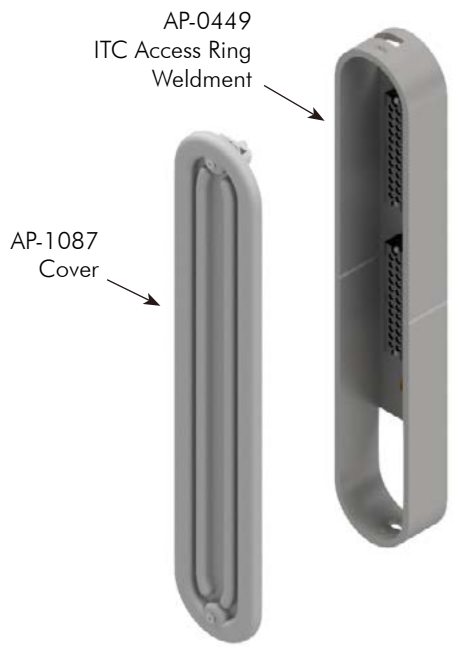

ITC Access Compartment w/ Door
3/8" x 4-3/4" x 27" w/ 12 Circuit

	Terminal Block		Double Fuse Block		Coating
AP-1083	- [ ]	-	[ ]	-	[ ]
	85A=Compression 65A=Compression 30A=Barrier Strip		Blank=None 3AF=3 Amp Fuse 10F=10 Amp Fuse		PNC=Process No Color P_ _=Paint

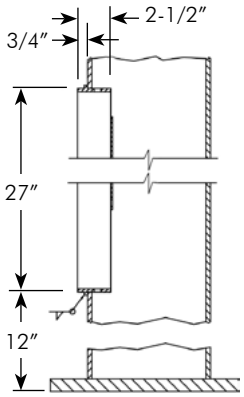

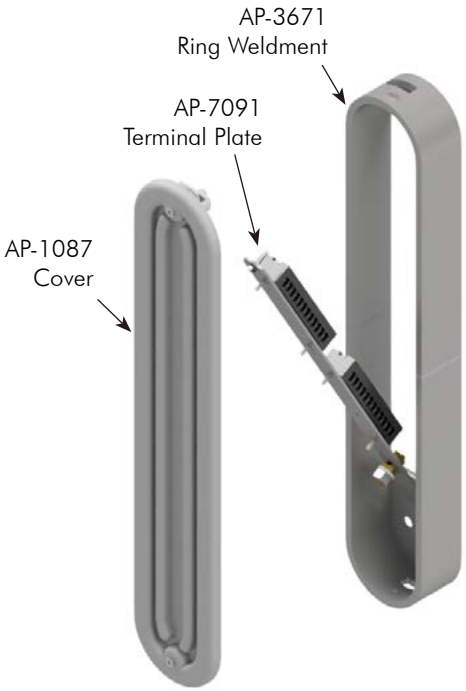

ITC Access Compartment w/ Door
Fold out Terminals
3/8" x 4-3/4" x 27" w/ 12 Circuit

	Terminal Block		Double Fuse Block		Coating
AP-1125	- [ ]	-	[ ]	-	[ ]
	85A=Compression 65A=Compression 30A=Barrier Strip		Blank=None 3AF=3 Amp Fuse 10F=10 Amp Fuse		PNC=Process No Color P_ _=Paint

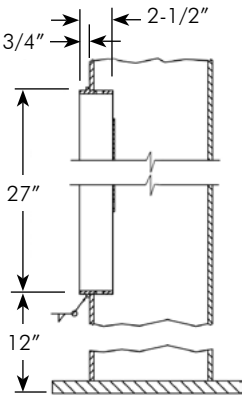

Note: 1. All assemblies are supplied standard with stainless steel fasteners.
2. See Reference Section for available paint colors.

ITC Access Compartments

Pelco's ITC, Integral Terminal Compartment and Hand Hole, is an industry standard that has a low profile and unobstructed opening. The fold-out terminal plate provides for easier wiring access. Available with three terminal block options.

AP-1087-PNC **ITC Cover Assembly, Vacuum formed ABS**

AP-1081-PNC **Double Fuse Block Kit, 600V, 3 Amp Fuse**

AP-1117-PNC **Double Fuse Block Kit, 600V, 10 Amp Fuse, Texas Spec**

Note: All assemblies are supplied standard with stainless steel fasteners.

ISO 9001 www.intlcert.com

ITC Access Compartments

Pelco's ITC, Integral Terminal Compartment and Hand Hole, is an industry standard that has a low profile and unobstructed opening. The fold-out terminal plate provides for easier wiring access. Available with three terminal block options.

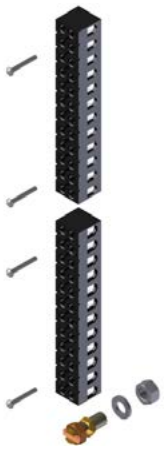

AP-1082-PNC **Terminal Block Assy, 85 Amp, 600V Compression Terminal Block w/ Hardware and Copper Ground Connector**

Note:
Terminal block conductor range for 85 Amp compression block option is 1-#18 thru 4-#10 per screw.

AP-1065-PNC **Terminal Block Assy, 65 Amp, 600V Compression Terminal Block w/ Hardware and Copper Ground Connector**

Note:
Terminal block conductor range for 65 Amp compression block option is 1-#18 thru 3-#12 per screw.

AP-1074-PNC **Terminal Block Assy, 30 Amp, 300V Terminal Strip Barrier Type w/ Hardware and Copper Ground Connector**

Note: All assemblies are supplied standard with stainless steel fasteners.

Typical Strain Pole

Pelco fabricates a variety of steel and aluminum mast arms and poles, ornamental or custom structures. Pelco offers numerous finishes from hot dip galvanized to powder coating. The strain pole clamp can be supplied in various sizes in 1-way thru 4-way options.

MATERIAL SPECIFICATIONS		
		GALV (IF REQUIRED)
POLE	ASTM A-595	ASTM A123
POLE	ASTM A-36	ASTM A123
MISC. PLATE & BAR	ASTM A-36	ASTM A123
ANCHOR BOLT	A-36 MOD 55	ASTM A153
ANCHOR BOLT NUT	ASTM A-563	ASTM A153

Note:
1. Hot dip galvanized after fabrication.
2. Contact Pelco with specific requirements.

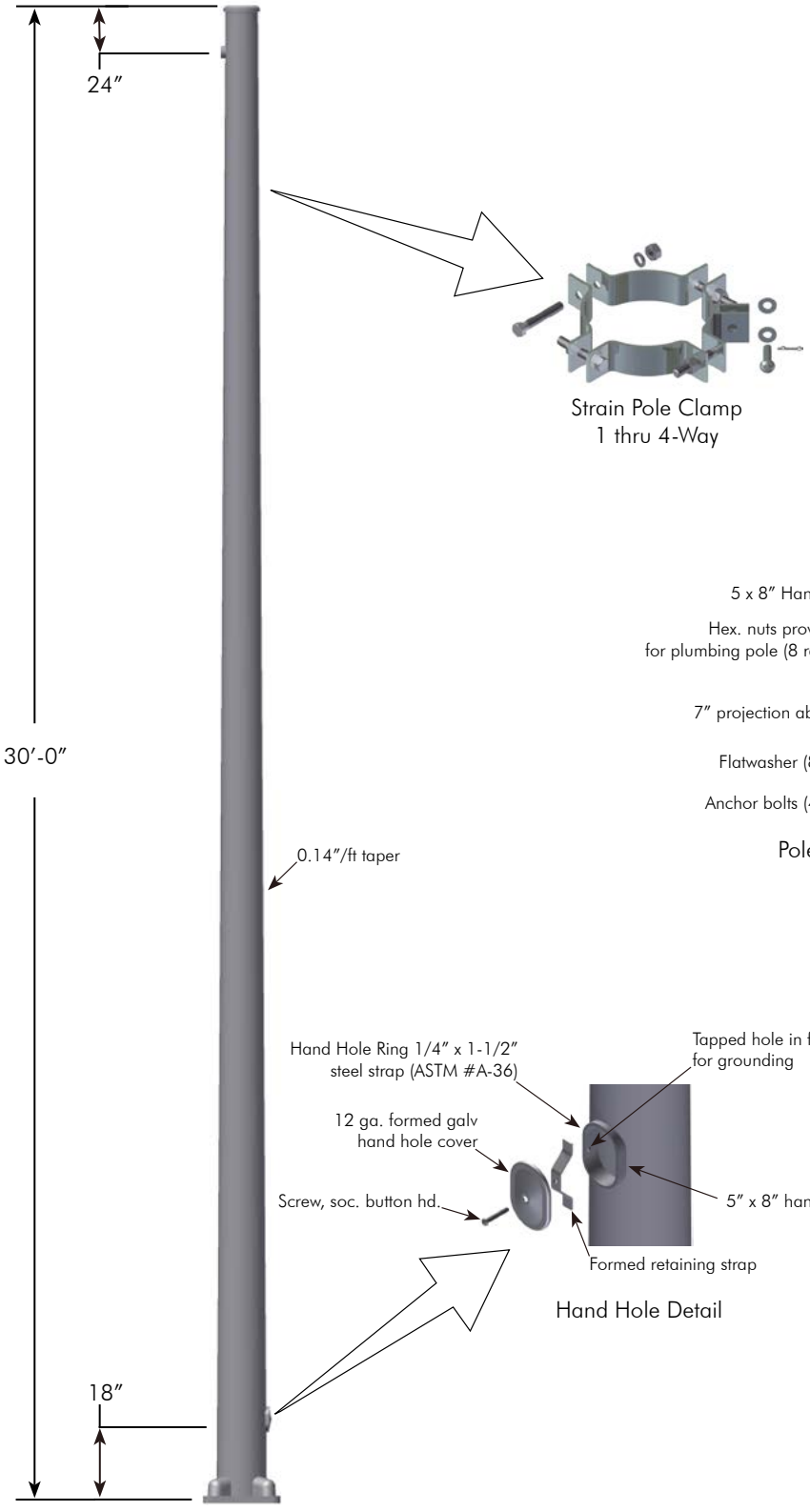

Strain Pole Clamp
1 thru 4-Way

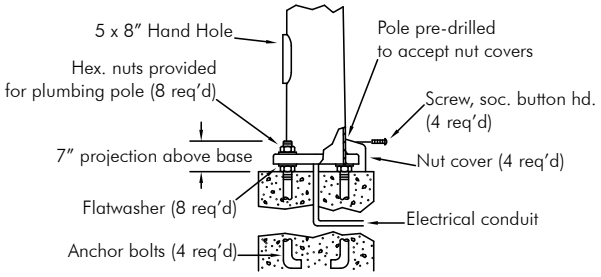

Pole Base and Anchor Bolt Detail

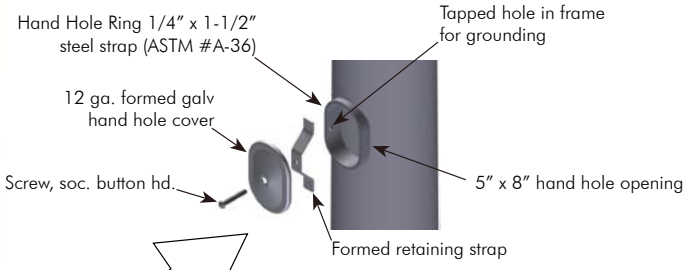

Hand Hole Detail

TUBE BUTT DIAMETER	ANCHOR BOLT SIZE
14″	2″-4-1/2 NC x 90″
13″	1-3/4″-5 NC x 90″
12″	1-1/2″-6 NC x 60″

ISO 9001
www.intlcert.com

Typical Mast Arm & Pole

Pelco fabricates a variety of steel and aluminum mast arms and poles, ornamental or custom structures. Pelco offers numerous finishes from hot dip galvanized to powder coating. The ITC access compartment makes wiring and maintence trouble free.

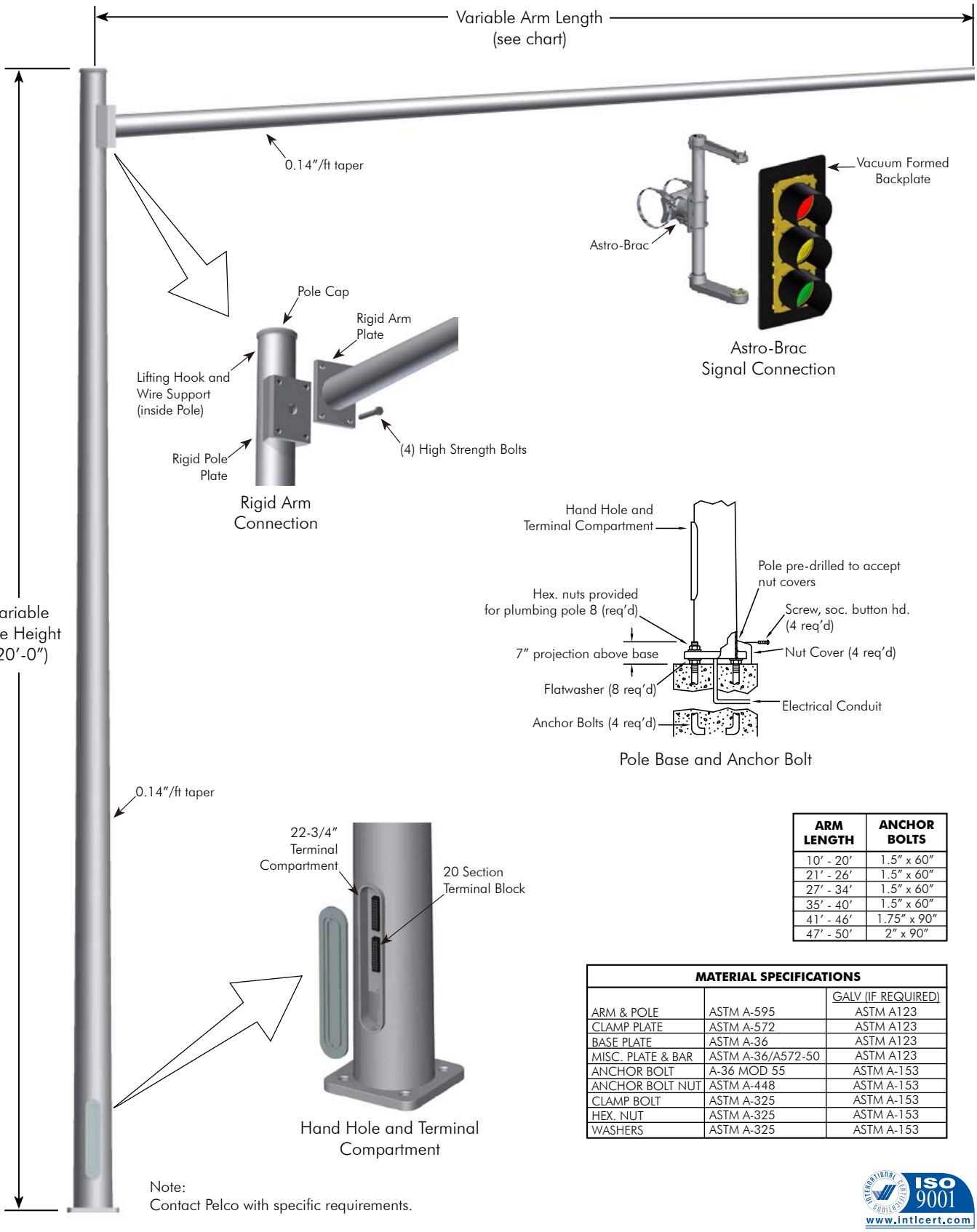

Astro-Brac
Signal Connection

Rigid Arm
Connection

Pole Base and Anchor Bolt

Hand Hole and Terminal
Compartment

ARM LENGTH	ANCHOR BOLTS
10' - 20'	1.5" x 60"
21' - 26'	1.5" x 60"
27' - 34'	1.5" x 60"
35' - 40'	1.5" x 60"
41' - 46'	1.75" x 90"
47' - 50'	2" x 90"

MATERIAL SPECIFICATIONS		
		GALV (IF REQUIRED)
ARM & POLE	ASTM A-595	ASTM A123
CLAMP PLATE	ASTM A-572	ASTM A123
BASE PLATE	ASTM A-36	ASTM A123
MISC. PLATE & BAR	ASTM A-36/A572-50	ASTM A123
ANCHOR BOLT	A-36 MOD 55	ASTM A-153
ANCHOR BOLT NUT	ASTM A-448	ASTM A-153
CLAMP BOLT	ASTM A-325	ASTM A-153
HEX. NUT	ASTM A-325	ASTM A-153
WASHERS	ASTM A-325	ASTM A-153

Note:
Contact Pelco with specific requirements.

ISO 9001
www.intlcert.com

This page is intentionally left blank.

Foundation Anchors

Pelco's foundation anchors feature a top plate which enables the bolt head to be inserted after the anchor is in place. This eliminates the neccessity of digging under the plate to install base bolts. Plate scrapers loosen the soil for easy bolt installation from top of the plate. The bolt is held by the plate scraper which prevents it from turning.

PB-5369-GLV **Foundation Anchor Assy, 3" Sch 40 x 4'-0" 4-1/2" to 6-1/2" Bolt Circle, 1/2"-13NC Hardware**

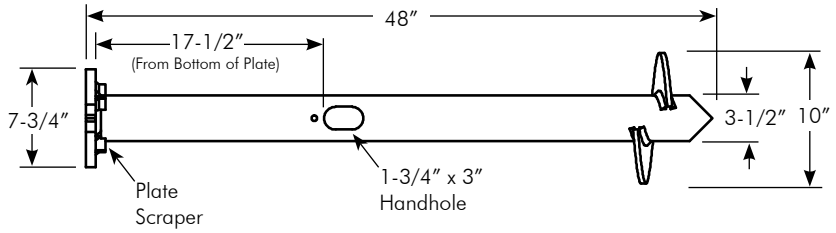

Note:
For residential, ornamental, and walkway lighting with small bases. (wt. 46 lbs.)

PB-5508-GLV **Foundation Anchor Assy, 3½" Sch 40 x 4'-0" 4-1/2" to 6-1/2" Bolt Circle, 1/2"-13NC Hardware**

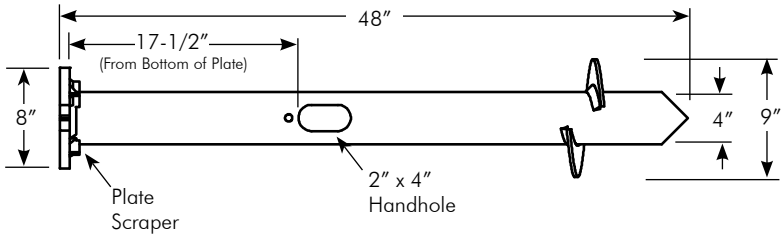

Note:
For residential, ornamental, and walkway lighting with small bases. (wt. 43 lbs.)

Note: 1. Foundation anchors are hot dip galvanized per ASTM A123.
2. All assemblies are supplied with Grade 5 Galvanized Bolts.
3. All assemblies with hardware are bagged in a nylon weatherproof bag.

Foundation Anchors

Pelco's foundation anchors feature a top plate which enables the bolt head to be inserted after the anchor is in place. This eliminates the neccessity of digging under the plate to install base bolts. Plate scrapers loosen the soil for easy bolt installation from top of the plate. The bolt is held by the plate scraper which prevents it from turning.

PB-5364-GLV **Foundation Anchor Assy, 4" Sch 40 x 4'-8"**
8-1/4" to 14-3/4" Bolt Circle
3/4"-10NC Hardware

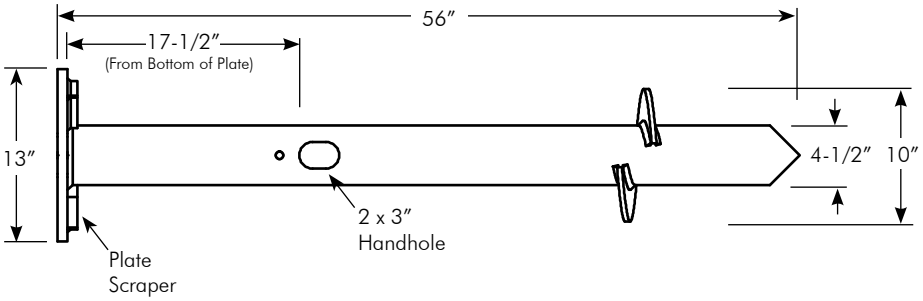

Note:
For residential lights, parking lots, and street lights. Typically for pole heights up to 16'. (wt. 94 lbs.)

Note: 1. Foundation anchors are hot dip galvanized per ASTM A123.
2. All assemblies are supplied with Grade 5 Galvanized Bolts.
3. All assemblies with hardware are bagged in a nylon weatherproof bag.

ISO 9001 www.intlcert.com

Foundation Anchors

Pelco's foundation anchors feature a top plate which enables the bolt head to be inserted after the anchor is in place. This eliminates the necessity of digging under the plate to install base bolts. Plate scrapers loosen the soil for easy bolt installation from top of the plate. The bolt is held by the plate scraper which prevents it from turning.

Foundation Anchor Assy, 6" Sch 40 x Length
9" to 14" Bolt Circle
1"-8NC Hardware

PB-5537 - [Length] - GLV

Length
48=4'-0"
60=5'-0"
72=6'-0"
84=8'-0"

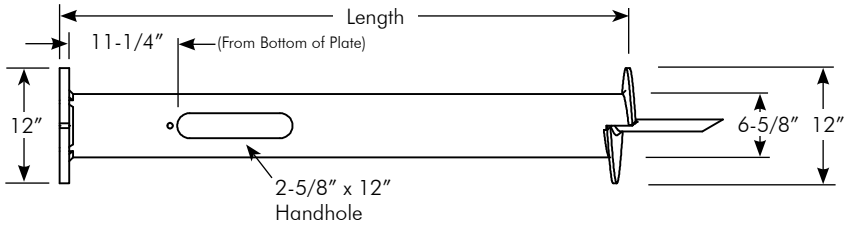

Note:
48' (wt. 115 lbs.); 60" (wt. 134 lbs.); 72" (wt. 152 lbs.); 84" (wt. 172 lbs.)

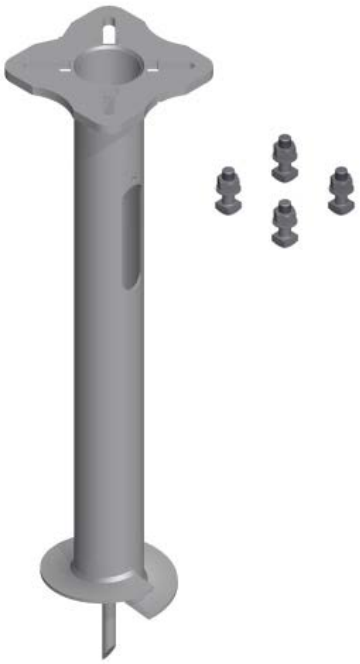

PB-5372-GLV **Foundation Anchor Assy, 6" Sch 40 x 5'-0"**
10" to 15" Bolt Circle
1"-8NC Hardware

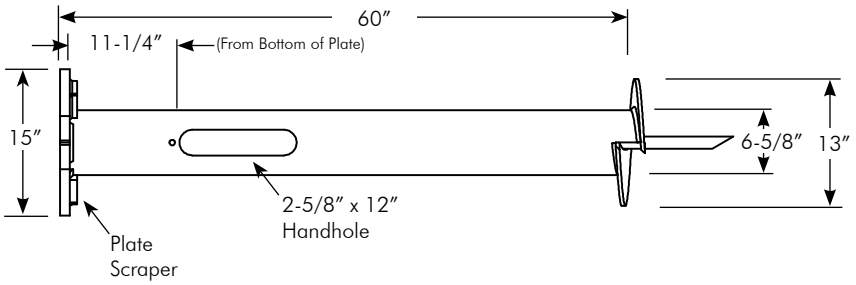

Note:
For residential lights, parking lots, etc. Typically for poles ranging from 20'-30' in height. (wt.167 lbs.)

Note: 1. Foundation anchors are hot dip galvanized per ASTM A123.
2. All assemblies are supplied with Grade 5 Galvanized Bolts.
3. All assemblies with hardware are bagged in a nylon weatherproof bag.

Foundation Anchors

Pelco's foundation anchors feature a top plate which enables the bolt head to be inserted after the anchor is in place. The carriage bolts, in the hardware kit, are locked in place by the slots in the top plate, preventing them from turning.

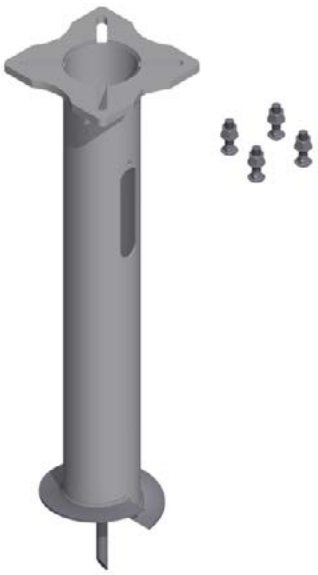

PB-5534-GLV **Foundation Anchor Assy, 8" Sch 20 x 5'-0"**
11" to 17" Bolt Circle
1"-8NC Hardware

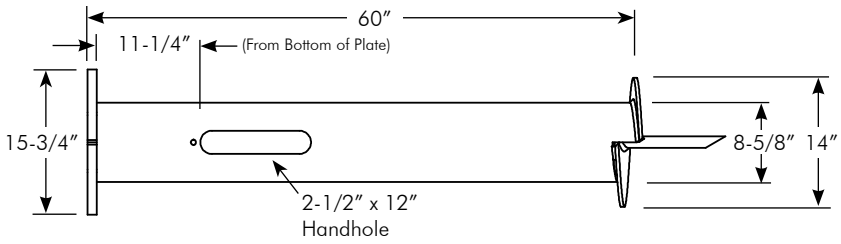

Note:
For street and highway lighting. Typically for poles ranging from 30'-50' in height. (wt.184 lbs.)

PB-5375-GLV **Foundation Anchor Assy, 8" Sch 40 x 5'-0"**
13" to 18" Bolt Circle
1-1/4"-7NC Hardware

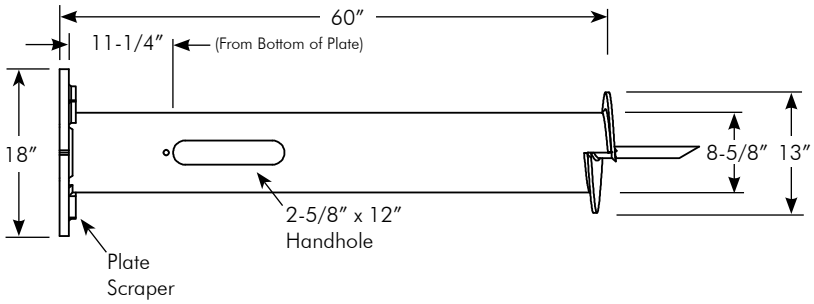

Note:
For street and highway lighting. Typically for poles ranging from 30'-50' in height. (wt. 239 lbs.)

Note: 1. Foundation anchors are hot dip galvanized per ASTM A123.
2. All assemblies are supplied with Grade 5 Galvanized Bolts.
3. All assemblies with hardware are bagged in a nylon weatherproof bag.

ISO 9001
www.intlcert.com

Foundation Anchors

Pelco's foundation anchors feature a top plate which enables the bolt head to be inserted after the anchor is in place. The carriage bolts, in the hardware kit, are locked in place by the slots in the top plate, preventing them from turning.

PB-5535-GLV **Foundation Anchor Assy, 10" Sch 20 x 10'-0"**
13-1/2" to 17" Bolt Circle
1"-8NC Hardware

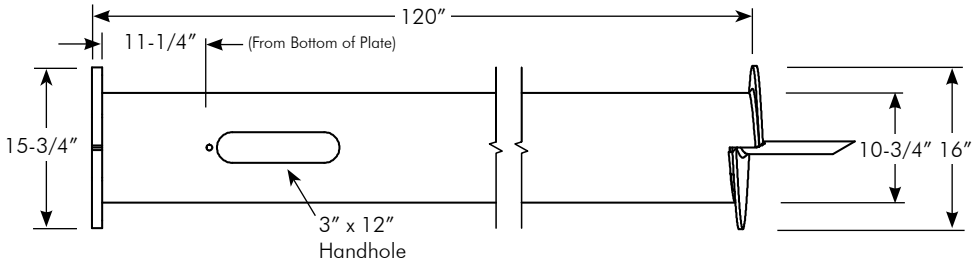

Note:
For street and highway lighting. Typically for poles ranging from 30'-50' in height. (wt. 359 lbs.)

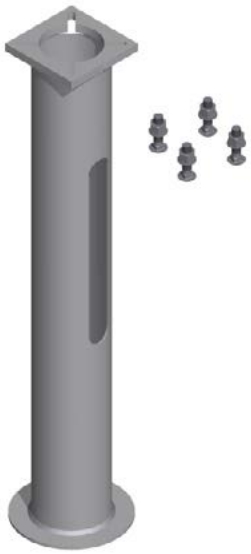

SP-6360-GLV **Foundation Anchor Assy, 8" Sch 20 x 5'-0"**
8" to 11" Bolt Circle,
3/4"-10NC Hardware

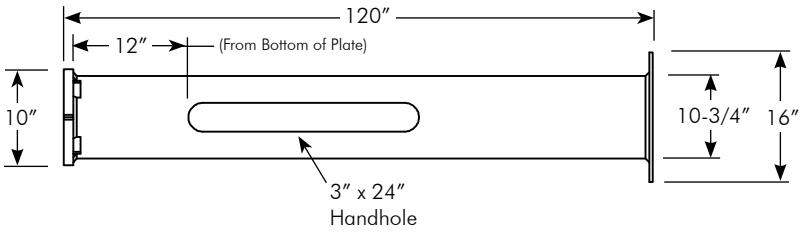

Note:
Designed to be stabilized in conrete footing. Typically for poles up to 30' in height. (wt. 141 lbs)

Note: 1. Foundation anchors are hot dip galvanized per ASTM A123.
2. All assemblies are supplied with Grade 5 Galvanized Bolts.
3. All assemblies with hardware are bagged in a nylon weatherproof bag.

Foundation Anchors

Various accessories are available to assist in installation of foundation anchors and anchor bolts.

Driver Adapter for Foundation Anchor Steel

PB-0604-ZN1

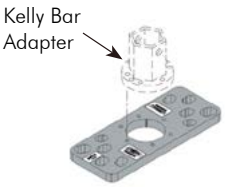

Note: Required to connect the Kelly Bar adapter (not supplied) to the foundation anchor for installation. Special hole pattern permits installation of foundation anchors having bolt circle diameters of 9" to 14-3/4". Zinc 1 Finish.

PB-0602-GLV **Shim, 1/16" x 2" x 2" Galvanized Steel**

PB-0603-GLV **Shim, 1/8" x 2" x 2" Galvanized Steel**

AP-3085-PNC **Anchor Bolt Template, ABS Plastic**

- Quick, easy set-up in minutes
- 41 different bolt circle patterns, 5-1/2" to 25-1/2"
- Easy guide divots every 1/2"
- Reusable

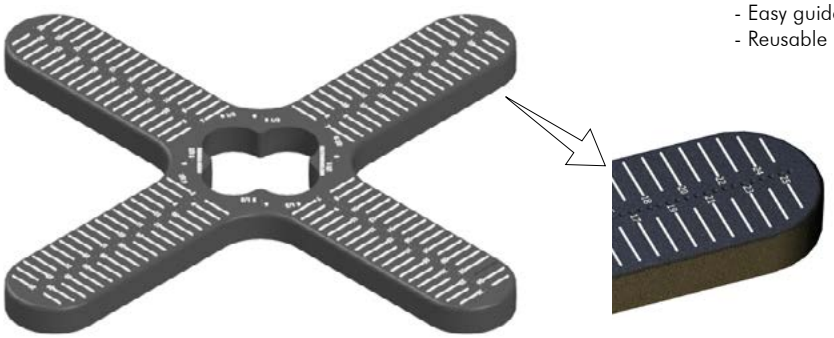

The Bolt Template is a reusable "tool" used for layout of bolts to be used in concrete for the future installation of poles. Constructed of UV stabilized ABS plastic, the Bolt Template may be used for various bolt patterns from 5-1/2" up to 25-1/2". Accepts multiple conduits through the center with the capacity for up to two 2" conduits and multiple smaller conduits at one time.

Note: See Section T11 for anchor bolt sets and cages.

ISO 9001
www.intlcert.com

GPL
Geometrically Programmed Louvers

The Pelco GPL is a precisely aimed and controlled traffic signal louvering system which is designed for quick easy installation. Drivers see a full circle of bright projected light when they are within the preset field of vision. The GPL is available without a visor or with a full circle visor that easily replaces the existing visor on most signals.

GPL, Geometrically Programmed Louver, 12" w/o Visor

GL-1001 - [Cut-Off] - PNC

Cut-Off
7=7°
8=8°
9=9°
11=11°
13=13°
15=15°
23.5=23.5°
42=42°

GPL, Geometrically Programmed Louver, 12" w/ Visor w/ Universal Clips

GL-1010 - [Cut-Off] - [Coating]

Cut-Off
7=7°
8=8°
9=9°
11=11°
13=13°
15=15°
23.5=23.5°
42=42°

Coating
P_ _=Paint

Note: 1. All assemblies are supplied standard with stainless steel fasteners.
2. Universal Clips fit Eagle, Econolite, TCT, Mark IV, and McCain signals.
3. See Reference Section for available paint colors.

GPL View Angle Adjustments

The Pelco GPL is a precisely aimed and controlled traffic signal louvering system which is designed for quick easy installation. Drivers see a full circle of bright projected light when they are within the preset field of vision. The GPL is available without a visor or with a full circle visor that easily replaces the existing visor on most signals.

GPL Baffle Locations 1 thru 11

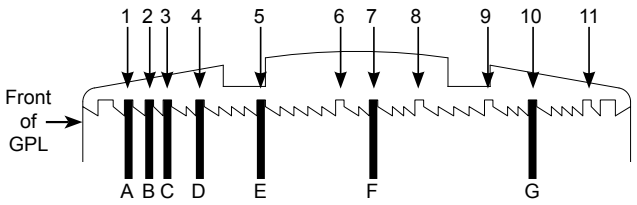

Baffles A thru G
(Baffles shown in factory set positons for 8° View Angle)

View Angle	Baffle Position for GPL
7°	Move baffle "G" to #11 position
8°	All baffles in factory set position #1, 2, 3, 4, 5, 7, & 10
9°	Move baffle "G" to #9 position
11°	Move baffle "G" to #8 position
13°	Omit baffle "G" completely
15°	Omit baffle "G" completely & move baffle "F" to #6 position
23½°	Omit baffle "F" & "G" completely
42°	Omit baffle "E", "F" & "G" completely

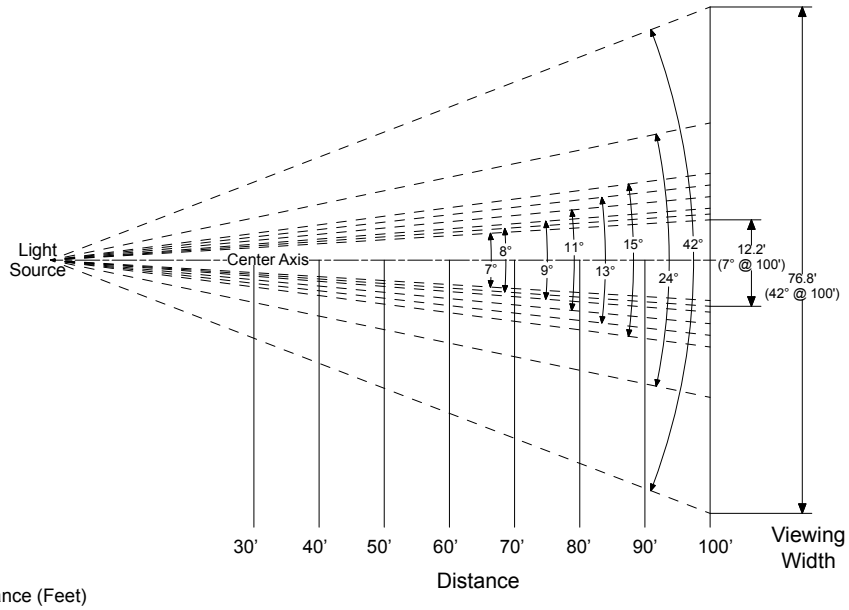

Distance (Feet)

View Angle (Degrees)	40'	50'	60'	70'	80'	90'	100'	120'
7°	4.9'	6.1'	7.3'	8.6'	9.8'	11.0'	12.2'	14.7'
8°	5.6'	7.0'	8.4'	9.8'	11.2'	12.6'	14.0'	16.8'
9°	6.3'	7.9'	9.4'	11.0'	12.6'	14.2'	15.7'	18.9'
11°	7.7'	9.6'	11.6'	13.5'	15.4'	17.3'	19.3'	23.1'
13°	9.1'	10.5'	13.7'	16.0'	18.2'	20.5'	22.8'	27.3'
15°	10.5'	13.2'	15.8'	18.4'	21.1'	23.7'	26.3'	31.6'
23°30'	16.6'	20.8'	25'	29.1'	33.3'	37.4'	41.6'	49.9'
42°	30.7'	38.4'	46.1'	53.7'	61.4'	69.1'	76.8'	92.1'

Viewing Width

ISO 9001
www.intlcert.com

Aluminum Signal Visors

Full circle and tunnel signal visors are supplied with a universal clip for attachment to signal. Black inside, federal yellow or black outside.

Visor, Full Circle w/ Slots for 12" GPL w/ Universal Clips

SM-1028-UC - [ ] Coating

P_ _=Paint

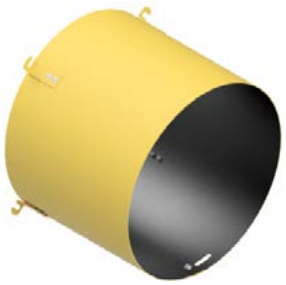

Visor, Full Circle w/o Slots for 12" Signal w/ Universal Clips

SM-1031-UC - [ ] Coating

P_ _=Paint

Visor, Tunnel for 12" Signal w/ Universal Clips

SM-1034-UC - [ ] Coating

P_ _=Paint

Universal Clip Set of 4

SM-1040 - [ ] Coating

P_ _=Paint

Note: 1. All assemblies are supplied standard with stainless steel fasteners.
2. Universal Clips fit Eagle, Econolite, TCT, Mark IV, and McCain signals.
3. See Reference Section for available paint colors.

Signal Accessories

The adjustment tool makes it easy to install and adjust a GPL in an existing visor. Pelco also provides a complete installation kit.

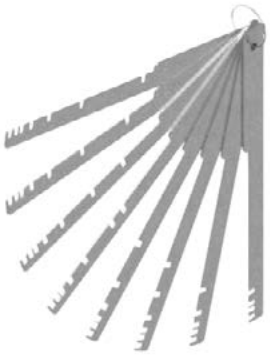

GL-1008-PNC **GPL Combs, Baffle Adjustment Set of 8, Stainless**
Includes 7°, 8°, 9°, 11°, 13°, 15°, 23.5°, 42°

GL-1002-PNC **Adjustment Tool, GPL w/ Depth Gauge**

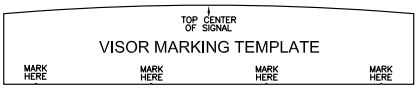

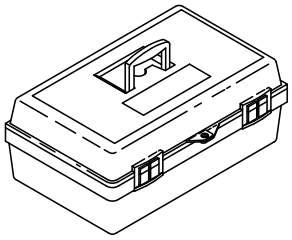

GL-2001-PNC **Installation Kit w/o Screw Gun**
Includes: adjustment tool, visor marking template & sleeve, marking pen, 1/4" & 5/16" shock cord in a small tool box.

GL-2002-PNC **Installation Kit w/ Screw Gun**
Includes: adjustment tool, visor marking template & sleeve, marking pen, 1/4" & 5/16" shock cord, cordless screw gun, battery & charger in a large tool box.

Confirmation Lights

Used to confirm a traffic signal is red when a car enters the intersection. Available in clear, red, or blue and various mounting applications.

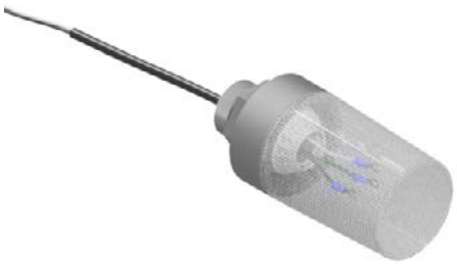

Confirmation Light Assy w/ Globe

SM-0284 - [ ] - [ ]

- Globe Color: CL=Clear, RD=Red, BL=Blue
- Coating: PNC=Process No Color, P_ _=Paint

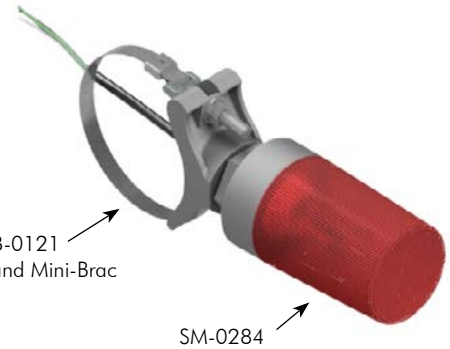

Confirmation Light Assy w/ Globe Band Mount Astro Mini-Brac

SM-0286 - [ ] - [ ] - [ ] - [ ]

- Globe Color: CL=Clear, RD=Red, BL=Blue
- Band Length: 29=29″ Band, 42=42″ Band
- Stainless Upgrade: Blank=Galv, SS=Stainless
- Coating: PNC=Process No Color, P_ _=Paint

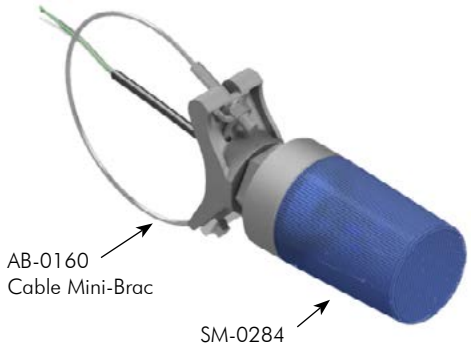

Confirmation Light Assy w/ Globe Cable Mount Astro Mini-Brac

SM-0321 - [ ] - [ ] - [ ] - [ ]

- Globe Color: CL=Clear, RD=Red, BL=Blue
- Cable Length: 45=45″ Cable, 62=62″ Cable, 84=84″ Cable
- Stainless Upgrade: Blank=Galv, SS=Stainless
- Coating: PNC=Process No Color, P_ _=Paint

Typical Applications:

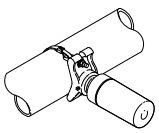

Mast Arm Mount
Astro-Mini-Brac

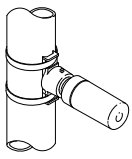

Side-of-Pole Mount
Banded Narrow Hub

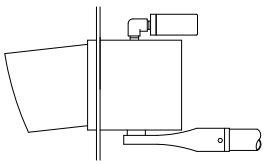

Plumbizer Mount

Note: 1. All assemblies are supplied standard with stainless fasteners and natural aluminum coating. Stainless upgrade to include stainless steel clamp screw or stainless cable.
2. See Reference Section for available paint colors.

Copper Safe© Cable Retainers

Pelco'santi-theft Cable Retainers are the best solution to help prevent copper cable theft in roadway lighting and traffic poles. Cable Retainers are available in various sizes, are easy to install, and work with Pelco's foundation anchors or existing foundations.

SP-6224-GLV **Cable Retainer Assy, For 4" Foundation Anchor, Galvanized Steel**

Note:
Works with Pelco's PB-5364 4" Foundation Anchor or with existing foundations with a 8" to 13-1/2" bolt circle. Secures 3/16" to 1/2" diameter cables.

SP-6200-GLV **Cable Retainer Assy, For 6" Foundation Anchor, Galvanized Steel**

Note:
Works with Pelco's PB-5372 6" Foundation Anchor or with existing foundations with a 9-1/2" to 13-1/2" bolt circle. Secures 3/16" to 1/2" diameter cables.

SP-6205-GLV **Cable Retainer Assy, For 8" Foundation Anchor, Galvanized Steel**

Note:
Works with Pelco's PB-5375 8" Foundation Anchor or with existing foundations with a 11-1/2" to 17" bolt circle. Secures 3/16" to 1/2" diameter cables.

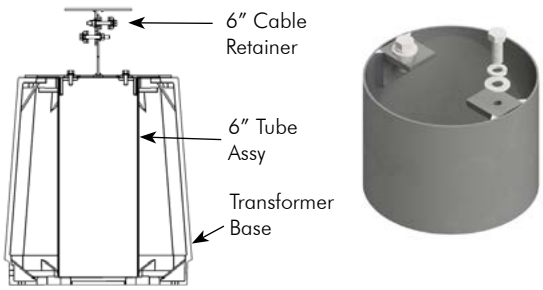

Tube Assy for 6" Cable Retainer, Galvanized Steel

Length

SP-6358 - [ ] - GLV

04.5=4-1/2"
16.38=16-3/8"

Note: 1. All assemblies are supplied standard with stainless fasteners.

ISO 9001
www.intlcert.com

Copper Safe© Base Doors

Pelco's anti-theft Transformer Base Doors are shatter-resistant and pull-off resistant to protect against copper theft. The doors require a special Pelco Installation Kit which includes everything required for installing multiple doors and covers.

Door Assy, Copper Safe© Theft Deterrent, Steel Fits Akron TB1-17, TB1-17 Mod, TB2-17, & TB3-17 Transformer Bases

PB-5520 - [ ] Coating
P__ = Paint

Door Assy, Copper Safe© Theft Deterrent, Steel Fits Akron TB1-20, TB1-20 Mod, TB2-20, & TB3-20 Transformer Bases

PB-5526 - [ ] Coating
P__ = Paint

Door Assy, Copper Safe© Theft Deterrent, Steel Fits Akron TB-17H Transformer Base

PB-5536 - [ ] Coating
P__ = Paint

Note: 1. All assemblies are supplied standard with stainless fasteners.
2. Doors require AP-5121 Kit for installation.
3. Typically powder coated P40 Silver, see Reference Section for other available paint colors.

Copper Safe© Base Doors

Pelco's anti-theft Transformer Base Doors are shatter-resistant and pull-off resistant to protect against copper theft. The doors require a special Pelco Installation Kit which includes everything required for installing multiple doors and covers.

Door Assy, Copper Safe© Theft Deterrent, Steel Fits Union Metal Med Transformer Base

PB-5529 - [ ] Coating
P__ = Paint

Door Assy, Copper Safe© Theft Deterrent, Steel Fits AB Chance Transformer Base

PB-5531 - [ ] Coating
P__ = Paint

Note: 1. All assemblies are supplied standard with stainless fasteners.
2. Covers require AP-5121 Kit for installation.
3. Typically powder coated P40 Silver, see Reference Section for other available paint colors.

Copper Safe© Hand Hole Covers

Pelco's anti-theft Hand Hole Covers are shatter-resistant and pull-off resistant to protect against copper theft. Copper Safe© covers are available for various sized hand holes. A special Pelco Installation Kit is required which includes everything needed for installing multiple covers and doors.

Hand Hole Cover Assy, Copper Safe© Theft Deterrent, Fits 4.38" x 9.63" to 5.13" x 10.38" Oval Opening Steel

AP-3172 - Coating [ ] P__= Paint

Hand Hole Cover Assy, Copper Safe© Theft Deterrent, Fits 3.25" x 9.75" to 4.25" x 10.75" Oval Opening Steel

AP-3173 - Coating [ ] P__= Paint

Hand Hole Cover Assy, Copper Safe© Theft Deterrent, Steel

AP-3161 - Coating [ ] P__= Paint fits 2.13" x 5.13" to 3.38" x 6.38" Oval Opening

AP-3160 - Coating [ ] P__= Paint fits 2" x 5" to 2.25" 5.25" Oval Opening

Hand Hole Cover Assy, Copper Safe© Theft Deterrent, Fits 4.63" x 7.88" to 5.75" x 9" Oval Opening Steel

AP-3167 - Coating [ ] P__= Paint

Note: 1. All assemblies are supplied standard with stainless fasteners.
2. Covers require AP-5121 Kit for installation.
3. Typically powder coated P40 Silver, see Reference Section for other available paint colors.

Copper Safe© Hand Hole Covers

Pelco's anti-theft Hand Hole Covers are shatter-resistant and pull-off resistant to protect against copper theft. Copper Safe© covers are available for various sized hand holes. A special Pelco Installation Kit is required which includes everything needed for installing multiple covers and doors.

Hand Hole Cover Assy, Copper Safe© Theft Deterrent, Fits 5" x 8" Oval Hand Hole Ring Steel

AP-3158 - [ ]

Coating
P__ = Paint

Hand Hole Cover Assy, Copper Safe© Theft Deterrent, 3.38" x 4.38" to 5" x 6" Oval Opening on 8" OD Pole Steel

AP-3162 - [ ]

Coating
P__ = Paint

Installation Kit, Copper Safe© Theft Deterrent, for Hand Hole Covers & Doors

AP-5121-PNC

Note:
Required for installing Pelco's theft-deterrent hand hole covers and doors. Includes 3/16" & 3/8" drill bits, security extensions,and security extension wrench, in a PVC storage case. Installation Kit is reusable.

Note: 1. All assemblies are supplied standard with stainless fasteners.
2. Covers require AP-5121 Kit for installation.
3. Typically powder coated P40 Silver, see Reference Section for other available paint colors.

Aluminum Pipe Fittings

Ell, Serrated, 1-1/2" NPS, Alum

SE-0457 - [Ports] - [Coating]

Ports: SOE=Slip 1 End

Coating: PNC=Process No Color; P_ _=Paint

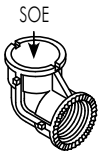

Ell, Serrated, 1-1/2" NPS w/ Tri-Stud Adapter, Alum

SE-0514 - [Coating]

Coating: PNC=Process No Color; P_ _=Paint

Ell, Serrated, 1-1/2" NPS w/ Tri-Bolt Adapter, Alum

SE-0501 - [Coating]

Coating: PNC=Process No Color; P_ _=Paint

Tee, Serrated, 1-1/2" NPS, Alum

SE-0458 - [Ports] - [Coating]

Ports: SOE=Slip1 End

Coating: PNC=Process No Color; P_ _=Paint

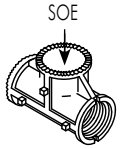

Tee, Serrated, 1-1/2" NPS, Horizontal Slip, Alum

SE-0474 - [Coating]

Coating: PNC=Process No Color; P_ _=Paint

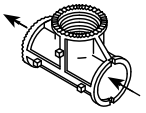

Note: 1. All assemblies are supplied standard with stainless steel fasteners.
2. If double set screws are required, specify by including -DS in the part number, i.e., SE-0457-DS-PNC.
3. See Reference Section for available paint colors.

Aluminum Pipe Fittings

Tee, Serrated, 1-1/2" NPS w/ Tri-Stud Adapter, Alum

SE-0513 - [ ] (Coating)

PNC=Process No Color
P_ _=Paint

Tee, Serrated, 1-1/2" NPS w/ Tri-Bolt Adapter, Alum

SE-0500 - [ ] (Coating)

PNC=Process No Color
P_ _=Paint

Cross, Serrated, 1-1/2" NPS, Alum

SE-4038 - [ ] (Ports) - [ ] (Coating)

SOE=Slip1 End
SBE=Slip Both Ends

PNC=Process No Color
P_ _=Paint

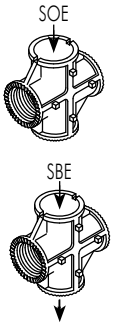

Center Support, 3-Way, 1-1/2" NPS, Alum

SE-0310 - [ ] (Coating)

PNC=Process No Color
P_ _=Paint

Center Support, 4-Way, 1-1/2" NPS, Alum

SE-0305 - [ ] (Ports) - [ ] (Coating)

SOE=Slip1 End

PNC=Process No Color
P_ _=Paint

Note: 1. All assemblies are supplied standard with stainless steel fasteners.
2. If double set screws are required specify by including -DS in the part number, i.e., SE-0513-DS-PNC.
3. See Reference Section for available paint colors.

ISO 9001 www.intlcert.com

COMPONENTS
PELCO PRODUCTS, INC.

Iron Pipe Fittings

Ell, Serrated, 1-1/2" NPS, Iron

SE-4415 - [Ports] - [Coating]

Ports: SOE=Slip 1 End

Coating: GLV=Galvanized, P__=Paint

Ell, 1-1/2" NPS, Iron

SE-4091 - [Ports] - [Coating]

Ports: SOE=Slip 1 End

Coating: GLV=Galvanized, P__=Paint

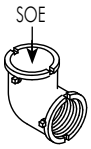

Tee, 1-1/2" NPS, Iron

SE-4092 - [Ports] - [Coating]

Ports: SOE=Slip 1 End, SBE=Slip Both Ends

Coating: GLV=Galvanized, P__=Paint

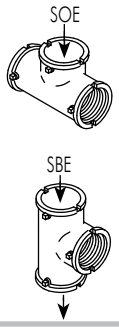

Cross, 1-1/2" NPS, Iron

SE-4093 - [Ports] - [Coating]

Ports: SOE=Slip 1 End, SBE=Slip Both Ends

Coating: GLV=Galvanized, P__=Paint

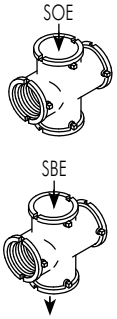

Note: 1. All assemblies are supplied standard with stainless steel fasteners.
2. If double set screws are required, specify by including -DS in the part number, i.e., SE-4415-DS-PNC.
3. Iron fittings, with the exception of SE-4415 Ell, are not serrated. For serrations add brass or alum serrated lockring.
4. See Reference Section for available paint colors.

Iron Pipe Fittings

Side Outlet Tee, 1-1/2" NPS, Iron

SE-0437 - [Ports] - [Coating]

Ports: SOE=Slip 1 End, N=Notched

Coating: GLV=Galvanized, P_ _=Paint

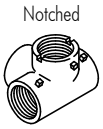

Center Support, 2-Way, 1-1/2" NPS, Iron

SE-0495 - [Coating]

Coating: -, P_ _=Paint

Center Support, 3-Way, 1-1/2" NPS, Iron

SE-0482 - [Coating]

Coating: P_ _=Paint

Note: Double set screws are standard.

Center Support, 4-Way, 1-1/2" NPS, Iron

SE-0496 - [Coating]

Coating: P_ _=Paint

Note: 1. All assemblies are supplied standard with stainless steel fasteners.
2. If double set screws are required, specify by including -DS in the part number, i.e., SE-0496-DS-PNC.
3. Iron fittings, with the exception of SE-4415 Ell, are not serrated. For serrations add alum or brass serrated lockring.
4. See Reference Section for available paint colors.

ISO 9001 www.intlcert.com

Span Wire

Span Wire Clamp w/ U-Bolts, 3/4" Wide Slot, Alum

SE-0321 - [ ] - [ ] - PNC

Bushing: Blank=None, SS=Stainless Bushing

Stainless Upgrade: Blank=Galv, SS=Stainless

Span Wire Clamp w/ U-Bolts, 5/8" Wide Slot, Alum

SE-4077 - [ ] - [ ] - PNC

Bushing: Blank=None, SS=Stainless Bushing

Stainless Upgrade: Blank=Galv, SS=Stainless

Span Wire Clamp w/ U-Bolts, 1/2" Wide Slot, Alum

SE-3211 - [ ] - [ ] - PNC

Bushing: Blank=None, SS=Stainless Bushing

Stainless Upgrade: Blank=Galv, SS=Stainless

Span Wire Clamp w/ J-Bolts, 3/4" Wide Slot, Alum

SE-4027 - [ ] - [ ] - PNC

Bushing: Blank=None, SS=Stainless Bushing

Stainless Upgrade: Blank=Galv, SS=Stainless

Span Wire Clamp w/ J-Bolts, 1/2" Wide Slot, Alum

SE-4397 - [ ] - [ ] - PNC

Bushing: Blank=None, SS=Stainless Bushing

Stainless Upgrade: Blank=Galv, SS=Stainless

Span Wire Clamp w/ U-Bolts, 1/2" Wide Slot, Alum

SE-0338 - [ ] - GLV

Stainless Upgrade: Blank=Galv, SS=Stainless

Span Wire Clamp w/ J-Bolts, 1/2" Wide Slot, Alum

SE-0441 - [ ] - GLV

Stainless Upgrade: Blank=Galv, SS=Stainless

Note: 1. All assemblies are supplied standard with galvanized hardware on span wire clamps. Stainless upgrade shall include stainless steel hardware on span wire clamps.

Span Wire Clamp, Universal w/ J-Bolts 1/2" Wide Slot, Alum

SE-3217 - [Bushing: Blank=None, SS=Stainless Bushing] - [Stainless Upgrade: Blank=Galv, SS=Stainless] - PNC

Span Wire Clamp, 90° w/ J-Bolts 1/2" Wide Slot, Alum

SE-3212 - [Bushing: Blank=None, SS=Stainless Bushing] - [Stainless Upgrade: Blank=Galv, SS=Stainless] - PNC

Span Wire Clamp w/ J-Bolts Serrated, Alum

SE-3213 - [Stainless Upgrade: Blank=Galv, SS=Stainless] - PNC

Span Wire Clamp w/ Stainless J-Bolts 3/4" Wide Slots, Bronze

SE-3213 - PNC

Note:
Supplied standard with stainless hardware.

Note: 1. All assemblies, with the exception of SE-3213 Bronze Clamp, are supplied standard with galvanized hardware on span wire clamps. Stainless upgrade shall include stainless steel hardware on span wire clamps.

ISO 9001
www.intlcert.com

Span Wire

Wire Outlet Body, Iron w/ Grommet
1-1/2" NPS, 1/2" Wide Comb

SE-4118 - [ ] (Coating)

P_ _=Paint

Wire Outlet Body, Alum w/ Grommet
1-1/2" NPS, 3/4" Wide Comb

SE-4117 - [ ] (Bushing) - PNC

Blank=None
SS=Stainless Bushing

Wire Outlet Body w/ Grommet
1-1/2" NPS, 3/4" Wide Comb, Bronze

SE-4421 - [ ] (Coating)

PNC=Process No Color
P_ _=Paint

Wire Outlet Body w/ Grommet
Tri-Stud, 3/4" Wide Comb, Alum

SE-0545 - [ ] (Bushing) - [ ] (Coating)

Blank=None
SS=Stainless Bushing

PNC=Process No Color
P_ _=Paint

Wire Outlet Body w/ Grommet
Tri-Stud, Single Clevis, Alum

SE-0524 - [ ] (Bushing) - [ ] (Coating)

Blank=None
SS=Stainless Bushing

PNC=Process No Color
P_ _=Paint

Wire Outlet Body w/ Grommet
Tri-Stud Adjustable, Alum

SE-0523 - [ ] (Coating)

PNC=Process No Color
P_ _=Paint

Note: 1. All assemblies are supplied standard with stainless steel fasteners.
2. If double set screws are required, specify by including -DS in the part number, i.e., SE-4118-DS-PNC.
3. See Reference Section for available paint colors.

Wire Outlet Body, Double
Single Clevis Tri-Stud, 3/4" Wide, Alum

SE-0531 - [Bushing] - [Coating]

Bushing: Blank=None, SS=Stainless Bushing

Coating: PNC=Process No Color, P_ _=Paint

Wire Outlet Body, Double
Single Clevis 1-1/2" NPS, 3/4" Wide, Alum

SE-4058 - [Bushing] - [Coating]

Bushing: Blank=None, SS=Stainless Bushing

Coating: PNC=Process No Color, P_ _=Paint

Wire Outlet Body, Double
Adjustable Tri-Stud, Alum

SE-0532 - [Coating]

Coating: PNC=Process No Color, P_ _=Paint

Wire Outlet Body, Double
Multi Clevis Tri-Stud, 3/4" Wide Comb, Alum

SE-0558 - [Bushing] - [Coating]

Bushing: Blank=None, SS=Stainless Bushing

Coating: PNC=Process No Color, P_ _=Paint

Wire Outlet Body, Double
Universal 1-1/2" NPS, 1/2" Wide Comb, Iron

SE-4155 - [Bushing] - [Coating]

Bushing: Blank=None, SS=Stainless Bushing

Coating: P_ _=Paint

Note: 1. All assemblies are supplied standard with stainless steel fasteners.
2. If double set screws are required, specify by including -DS in the part number, i.e., SE-4058-DS-PNC.
3. See Reference Section for available paint colors.

Span Wire

Hanger Body, 1-1/2" NPS, Alum

SE-0530 - [ ] Coating

PNC=Process No Color
P_ _=Paint

Hanger Body, Single-Stud, Alum

SE-0438 - [ ] Coating

PNC=Process No Color
P_ _=Paint

Hanger Body, Double Stud, Alum

SE-0516 - [ ] Coating

PNC=Process No Color
P_ _=Paint

Hanger Body, Tri-Stud, Alum

SE-0512 - [ ] Coating

PNC=Process No Color
P_ _=Paint

Note: 1. All assemblies are supplied standard with stainless steel fasteners.
2. If double set screws are required, specify by including -DS in the part number, i.e., SE-0530-DS-PNC.
3. See Reference Section for available paint colors.

Clevis Adapter, 1-1/2" NPS 3/4" Clevis, Alum

SE-4030 - [Bushing] - [Coating]

Bushing: Blank=None, SS=Stainless Bushing

Coating: PNC=Process No Color, P_ _=Paint

Clevis Adapter, 5/16"-18 Tri-Stud 3/4" Wide Clevis , Alum

SE-4031 - [Bushing] - [Coating]

Bushing: Blank=None, SS=Stainless Bushing

Coating: PNC=Process No Color, P_ _=Paint

Clevis Adapter, 1/2"-13 Single Stud 3/4" Wide Clevis, Alum

SE-0540 - [Bushing] - [Coating]

Bushing: Blank=None, SS=Stainless Bushing

Coating: PNC=Process No Color, P_ _=Paint

Clevis Adapter, 1/2"-13 Single Stud 3/4" Wide Slot, Alum

SE-0630 - [Bushing] - [Coating]

Bushing: Blank=None, SS=Stainless Bushing

Coating: PNC=Process No Color, P_ _=Paint

Note: 1. All assemblies are supplied standard with stainless steel fasteners.
2. If double set screws are required, specify by including -DS in the part number, i.e., SE-4030-DS-PNC.
3. See Reference Section for available paint colors.

ISO 9001 www.intlcert.com

COMPONENTS
PELCO PRODUCTS, INC.

Span Wire

Span Wire Adapter, 1-1/2" NPS 5/8" Clevis w/ Stainless Bushing, Alum

SE-0371 - [ ]

Coating
PNC=Process No Color
P_ _=Paint

Tri-Stud Adapter, 1-1/2" NPS External Threads Alum

SE-0503 - PNC

Tri-Bolt Adapter, 1-1/2" NPS External Threads Alum

SE-0502 - PNC

Tri-Stud Adapter, 1-1/2" NPS Internal Threads Alum

SE-0533 - [ ]

Coating
PNC=Process No Color
P_ _=Paint

Tri-Bolt Adapter, 1-1/2" NPS Internal Threads, Alum

SE-4242 - [ ]

Coating
PNC=Process No Color
P_ _=Paint

Note: 1. All assemblies are supplied standard with stainless steel fasteners.
2. If double set screws are required, specify by including -DS in the part number, i.e., SE-0533-DS-PNC.
3. See Reference Section for available paint colors.

Disconnect Balancer, 1-1/2" NPS 1/2" Wide Comb, Iron, Zinc 2

SE-0380-ZN2

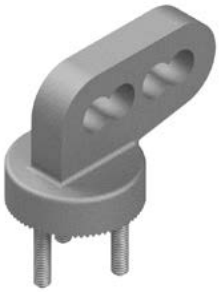

Disconnect Balancer, Tri-Stud 3/4" Wide Comb, Alum

SE-0505 - [ ] - [ ]

Bushing
Blank=None
SS=Stainless Bushing

Coating
PNC=Process No Color
P_ _=Paint

Note: 1. All assemblies are supplied standard with stainless steel fasteners.
2. See Reference Section for available paint colors.

Span Wire

PAL Balance Adjuster, Pivot and Lock Stainless Eyebolt, Steel

SE-3219 - [Slot] - [Eyebolt] - [Stainless Upgrade] - [Coating]

Slot	Eyebolt	Stainless Upgrade	Coating
0.50=1/2″ 0.75=3/4″	0.50=1/2″ 0.75=3/4″	Blank=Galv SS=Stainless	GLV=Galvanized P_ _=Paint

Balance Adjuster, Iron

SE-3108 - [Slot] - [Eyebolt] - [Stainless Upgrade] - [Coating]

Slot	Eyebolt	Stainless Upgrade	Coating
0.50=1/2″ 0.75=3/4″	0.50=1/2″ 0.75=3/4″	Blank=Galv SS=Stainless	GLV=Galvanized P_ _=Paint

Balance Adjuster, Bronze

SE-3200 - [Slot] - [Eyebolt] - [Coating]

Slot	Eyebolt	Coating
0.50=1/2″ 0.75=3/4″	0.50=1/2″ 0.75=3/4″	PNC=Process No Color P_ _=Paint

Balance Adjuster w/ Jam Nut & Lock Washer, Iron

SE-3191 - [Slot] - [Eyebolt] - [Stainless Upgrade] - [Coating]

Slot	Eyebolt	Stainless Upgrade	Coating
0.50=1/2″ 0.75=3/4″	0.50=1/2″ 0.75=3/4″	Blank=Galv SS=Stainless	GLV=Galvanized P_ _=Paint

Note: 1. All assemblies are supplied standard with stainless steel fasteners and galvanized clevis pins. Stainless upgrade shall include stainless steel clevis pins.
2. See Reference Section for available paint colors.

Clevis Hanger w/ Pins
3/4" Hanger x 3/4" Clevis, Alum

	Bushing		Stainless Upgrade		Coating
SE-0467 -	[ ]	-	[ ]	-	[ ]
	Blank=None SS=Stainless Bushing		Blank=Galv SS=Stainless		PNC=Process No Color P_ _=Paint

Clevis Hanger w/ Pins
3/4" Hanger x 1/2" Clevis, Alum

	Bushing		Stainless Upgrade		Coating
SE-0467 -	[ ]	-	[ ]	-	[ ]
	Blank=None SS=Stainless Bushing		Blank=Galv SS=Stainless		PNC=Process No Color P_ _=Paint

Clevis-Clevis Hanger w/ Pins
3/4" x 1/2", Alum

	Bushing		Stainless Upgrade		Coating
SE-0611 -	[ ]	-	[ ]	-	[ ]
	Blank=None SS=Stainless Bushing		Blank=Galv SS=Stainless		PNC=Process No Color P_ _=Paint

Clevis-Clevis Hanger w/ Pins
3/4" x 3/4", Alum

	Bushing		Stainless Upgrade		Coating
SE-0468 -	[ ]	-	[ ]	-	[ ]
	Blank=None SS=Stainless Bushing		Blank=Galv SS=Stainless		PNC=Process No Color P_ _=Paint

Clevis-Clevis Hanger w/ Pin
1/2" x 1/2", Alum

	Bushing		Stainless Upgrade		Coating
SE-0464 -	[ ]	-	[ ]	-	[ ]
	Blank=None SS=Stainless Bushing		Blank=Galv SS=Stainless		PNC=Process No Color P_ _=Paint

Note: 1. All assemblies are supplied standard with stainless steel fasteners and galvanized clevis pins. Stainless upgrade shall include stainless steel clevis pins.
2. See Reference Section for available paint colors.

ISO 9001
www.intlcert.com

Extender Connector Hanger, 10-Hole Alum

SE-0539 - [Bushing] - [Coating]

Bushing: Blank=None, SS=Stainless Bushing

Coating: PNC=Process No Color, P_ _=Paint

Extender Connector Hanger, 10-Hole, Serrated, Alum

SE-0543 - [Bushing] - [Coating]

Bushing: Blank=None, SS=Stainless Bushing

Coating: PNC=Process No Color, P_ _=Paint

Extender Connector Hanger, 2-Hole 1/2" Width, Alum

SE-0508 - [Bushing] - [Coating]

Bushing: Blank=None, SS=Stainless Bushing

Coating: PNC=Process No Color, P_ _=Paint

Extender Connector Hanger, 2-Hole 3/4" Width, Alum

SE-0613 - [Bushing] - [Coating]

Bushing: Blank=None, SS=Stainless Bushing

Coating: PNC=Process No Color, P_ _=Paint

Extender Connector Hanger, 2-Hole Heavy Duty 3/4" Width, Alum

SE-0656 - [Bushing] - [Coating]

Bushing: Blank=None, SS=Stainless Bushing

Coating: PNC=Process No Color, P_ _=Paint

Note: See Reference Section for available paint colors.

Extender, 3/8" Dia Holes 1" CTC, Alum

SE-0507 - [Length] - [Coating]

Length:
11=11"
19=19"
40=40"
72=72"

Coating:
PNC=Process No Color
P_ _=Paint

Tri-Stud Hanger Body, Adjustable 10-Hole, Alum

SE-0538 - [Coating]

Coating:
PNC=Process No Color
P_ _=Paint

Note: 1. All assemblies are supplied standard with stainless steel fasteners.
2. See Reference Section for available paint colors.

COMPONENTS
PELCO PRODUCTS, INC.
ISO 9001
www.intlcert.com

Span Wire

Stabilizer Bar, 2-Hole 2" x 6", Alum

SE-0536 - [ ] Coating

PNC=Process No Color
P_ _=Paint

Stabilizer Block, 2-Hole 2" x 6", Alum

SE-0544 - [ ] Coating

PNC=Process No Color
P_ _=Paint

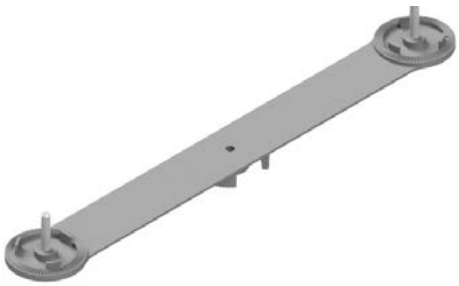

Lower Arm, 2-Way 16-1/2" CTC Single Stud Serrated, Alum

SE-4010 - [ ] Coating

PNC=Process No Color
P_ _=Paint

Lower Arm, 2-Way 17" CTC Single Stud Serrated, Alum

SE-0521 - [ ] Coating

PNC=Process No Color
P_ _=Paint

Note: See Reference Section for available paint colors.

This page is intentionally left blank.

Hubs & Mounting Brackets

Hub Plate w/ Cable Guide, 1-1/2" NPS, Alum

SE-0444 - [ ] Coating

PNC=Process No Color
P_ _=Paint

Hub Plate w/o Cable Guide, 1-1/2" NPS, Alum

SE-0445 - [ ] Coating

PNC=Process No Color
P_ _=Paint

Hub Plate w/o Cable Guide, 1-1/2" NPS, Iron

SE-4124 - [ ] Coating

P_ _=Paint

Hub Plate w/o Cable Guide, 1-1/2" NPS, Bronze

SE-4426 - [ ] Coating

PNC=Process No Color
P_ _=Paint

Hub Plate, Universal, 1-1/2" NPS w/ 15/16" Dia Hole in Rear, Alum

SE-4071 - [ ] Coating

PNC=Process No Color
P_ _=Paint

Hub Plate, Universal, 1-1/2" NPS w/ 1-1/2" Dia Hole in Rear, Alum

SE-4108 - [ ] Coating

PNC=Process No Color
P_ _=Paint

Note: 1. All assemblies are supplied standard with stainless steel fasteners.
2. Double set screw option available. Specify by including -DS in the part number, i.e., SE-0444-DS-PNC.
3. See Reference Section for available paint colors.

Hub Plate, Flat Back, 1-1/2" NPS, Alum

SE-0415 - [ ] Coating

PNC=Process No Color
P_ _=Paint

Hub Plate, 4" Pipe, 1-1/2" NPS, Alum

SE-0454 - [ ] Coating

PNC=Process No Color
P_ _=Paint

Hub Plate, Large Pole, 1-1/2" NPS, Alum

SE-0357 - [ ] Coating

PNC=Process No Color
P_ _=Paint

Note: 1. All assemblies are supplied standard with stainless steel fasteners.
2. Double set screw option available. Specify by including -DS in the part number, i.e., SE-0415-DS-PNC.
3. See Reference Section for available paint colors.

COMPONENTS
PELCO PRODUCTS, INC.
ISO 9001
www.intlcert.com

Hubs & Mounting Brackets

Hub Plate, Extended
1-1/2" NPS, Alum

SE-0381 - [Mounting] - [Coating]

Mounting: 0.75=3/4" Mounting Hole

Coating: PNC=Process No Color, P_ _=Paint

Hub Plate, Extended
1-1/2" NPS w/ Downhole, Alum

SE-0382 - [Mounting] - [Coating]

Mounting: 0.75=3/4" Mounting Hole

Coating: PNC=Process No Color, P_ _=Paint

Hub Plate, Extended Flat Back
1-1/2" NPS, Alum

SE-0465 - [Mounting] - [Coating]

Mounting: 0.75=3/4" Mounting Hole

Coating: PNC=Process No Color, P_ _=Paint

Hub Plate, Extended Flat Back
1-1/2" NPS w/ Downhole, Alum

SE-0466 - [Mounting] - [Coating]

Mounting: 0.75=3/4" Mounting Hole

Coating: PNC=Process No Color, P_ _=Paint

Note: 1. All assemblies are supplied standard with stainless steel fasteners.
2. Double set screw option available. Specify by including -DS in the part number, i.e., SE-0381-DS-PNC.
3. See Reference Section for available paint colors.

Hubs & Mounting Brackets

Hub Plate, Narrow, 1-1/2" NPS, Alum

SE-4050 - [ ]

Coating

PNC=Process No Color
P_ _=Paint

Hub Plate, Single, 1-1/2" NPS, Alum

SE-0111 - [ ] - [ ]

Mounting Hole

Blank= 3/8" Dia
0.563=9/16" Dia

Coating

PNC=Process No Color
P_ _=Paint

Hub Plate, Wood Pole 1-1/2" NPS, Alum

SE-4079 - [ ]

Coating

PNC=Process No Color
P_ _=Paint

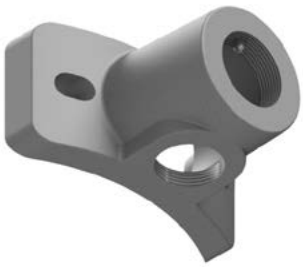

Hub Plate, Wood Pole 1-1/2" NPS w/ Downhole, Alum

SE-4080 - [ ]

Coating

PNC=Process No Color
P_ _=Paint

Note: 1. All assemblies are supplied standard with stainless steel fasteners.
2. Double set screw option available. Specify by including -DS in the part number, i.e., SE-4050-DS-PNC.
3. See Reference Section for available paint colors.

ISO 9001
www.intlcert.com

Hubs & Mounting Brackets

Cabinet Mounting Bracket, Alum

SE-0425 - [ ]

Coating
PNC=Process No Color
P_ _=Paint

Sign Clamp, 4-1/2" OD Pole, Alum

SH-0214 - [ ]

Coating
PNC=Process No Color
P_ _=Paint

Adapter, 2-7/8" to 3-1/2" OD Pole, Alum

SE-4078 - [ ]

Coating
PNC=Process No Color
P_ _=Paint

Mounting Bracket, 4-1/2" OD Pole, Alum

SE-0104 - [ ]

Coating
PNC=Process No Color
P_ _=Paint

Mounting Hub, 1-1/2" NPS, 4-1/2" OD Pole, Alum

SE-0384 - [ ]

Coating
PNC=Process No Color
P_ _=Paint

Note: 1. All assemblies are supplied standard with stainless steel fasteners.
2. Double set screw option available. Specify by including -DS in the part number, i.e., SE-0384-DS-PNC.
3. See Reference Section for available paint colors.

Hubs & Mounting Brackets

Cabinet Mounting Bracket, 1/8" Thick 4-1/2" x 3-3/8" x 4-1/2", Alum

SE-0141 - [ ]

Coating

PNC=Process No Color
P_ _=Paint

Cabinet Mounting Bracket, 1/8" Thick 4-1/2" x 3-3/8" x 2-7/8", Alum

SE-0113 - [ ]

Coating

PNC=Process No Color
P_ _=Paint

Cabinet Mounting Bracket, 1/4" Think 6-3/4" x 3-1/2" x 2-1/16", Alum

SE-0118 - [ ]

Coating

PNC=Process No Color
P_ _=Paint

Cabinet Mounting Bracket, 1/4" Thick 6-3/4" x 4-1/2" x 2-1/16", Alum

SE-0120 - [ ]

Coating

PNC=Process No Color
P_ _=Paint

Cabinet Mounting Bracket, 1/4" Thick 6-3/4" x 6" x 2-1/16", Alum

SE-0126 - [ ]

Coating

PNC=Process No Color
P_ _=Paint

Note: See Reference Section for available paint colors.

ISO 9001
www.intlcert.com

Hubs & Mounting Brackets

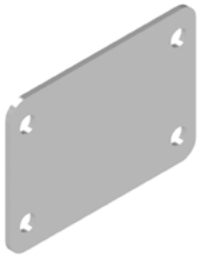

Closure Plate, Alum
Flasher Cabinet

SE-0117 - [ ]

Coating

PNC=Process No Color
P_ _=Paint

SE-0119-PNC **Hub Gasket, 1/8" Closed Cell Sponge Adhesive Backed Flasher Cabinet**

SE-0148-PNC **Hub Gasket, 1/8" Neoprene Flasher Cabinet**

This page is intentionally left blank.

Tubes & Pipes

Support Tube, 1-1/2" NPS, Alum

SE-0326 - [Length in Inches] - [Coating]

PNC=Process No Color
P_ _=Paint

Support Tube, 2" NPS, Alum

SE-4370 - [Length in Inches] - [Coating]

PNC=Process No Color
P_ _=Paint

Support Tube, 1-1/2" NPS, Steel

SE-0491 - [Length in Inches] - [Coating]

PNC=Process No Color
P_ _=Paint

Pipe, 1-1/2", Sch 40, Alum

SE-0484 - [Length in Inches] - [Coating]

PNC=Process No Color
P_ _=Paint

Pipe, 1-1/2", Sch 80, Alum

SE-0475 - [Length in Inches] - [Coating]

PNC=Process No Color
P_ _=Paint

Pipe, 2", Sch 40, Alum

SE-0494 - [Length in Inches] - [Coating]

PNC=Process No Color
P_ _=Paint

Pipe, 2", Sch 80, Alum

SE-4362 - [Length in Inches] - [Coating]

PNC=Process No Color
P_ _=Paint

Note: 1. Standard tubes and pipes are sold in 1 inch increments. For other lengths contacts sales.
2. See Reference Section for available paint colors.

Nipples

Nipple, 1-1/2" NPS, Alum

SE-0436 - [Length in Inches] - [Coating]

PNC=Process No Color
P_ _=Paint

Nipple, 1-1/2" NPS x 1-1/2" NPT, Alum

SE-4204 - [Length in Inches] - [Coating]

PNC=Process No Color
P_ _=Paint

Nipple, 1-1/2" NPS, Steel

SE-0469 - [Length in Inches] - [Coating]

P_ _=Paint

Nipple, 1-1/2" NPT, Steel

SE-4200 - [Length in Inches] - [Coating]

P_ _=Paint

All Thread Nipple, 1-1/2" NPS, Alum

SE-0309 - [Length] - PNC

02.13=2-1/8"
02.5=2-1/2"
03=3"
04=4"
04.5=4-1/2"
05=5"
06=6"

All Thread Nipple, 1-1/2" NPS, Steel

SE-0492 - [Length] - ZN1

02.13=2-1/8"
02.5=2-1/2"
03=3"
04=4"
04.5=4-1/2"
05=5"
06=6"

Close Nipple, 1-1/2" NPS x 1-1/2" NPT, Steel

SE-4063 - [Length] - ZN1

02.5=2-1/2"
03=3"
03.5=3-1/2"

Note: 1. Standard tubes and pipes are sold in 1 inch increments. For other lengths contacts sales.
2. See Reference Section for available paint colors.

ISO 9001
www.intlcert.com

COMPONENTS
PELCO PRODUCTS, INC.

Caps & Closures

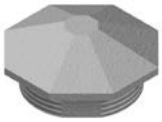

Octagonal Closure Cap, Alum
1-1/2" NPS x 1/2"

SE-4088 - [ ] Coating

PNC=Process No Color
P_ _=Paint

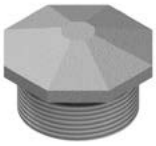

Octagonal Closure Cap, Alum
1-1/2" NPS x 7/8"

SE-0361 - [ ] Coating

PNC=Process No Color
P_ _=Paint

Octagonal Closure Cap, Alum
1-1/2" NPS x 1-3/8"

SE-0483 - [ ] Coating

PNC=Process No Color
P_ _=Paint

Octagonal Closure Cap, Alum
1-1/2" NPS x 2"

SE-0442 - [ ] Coating

PNC=Process No Color
P_ _=Paint

Octagonal Closure Cap, Plastic
1-1/2" NPS x 7/8"

SE-0499 - [ ] Coating

P01=Yellow
P02=Black
P05=New York State Green (forest)
P06=Automatic Green (dark olive)
P17=Platinum

Note: See Reference Section for available paint colors.

Fitting Cap, 1-1/2", Plastic

SE-0304 - [ ] Coating

P01=Yellow
P02=Black

Fitting Cap, 1-1/4", Plastic

SE-0419 - [ ] Coating

P01=Yellow
P02=Black

AS-0398-P02 **Tube Cap, Black Plastic**

AB-0271-PNC **Cap, CGB Closure, 3/4", Blue Plastic**

SE-0479-PNC **Plug, 1-1/4" Sq Hd, Threaded, Plastic,**

Signal Closure Kit, Plastic

SE-3054 - [ ] Coating

P01=Yellow
P02=Black
P05=New York State Green (forest)
P06=Automatic Green (dark olive)

Note: 1. All assemblies are supplied standard with stainless steel fasteners.

Hardware

SM-0173-ZN2 **Roger Wrench w/ 10" Handle, Steel, Zinc 2**

SE-0443-PNC **Hex Nipple, 1-1/2" NPS x 1-1/2" Lg, Alum**

SE-0435-ZN2 **Hex Nipple, 1-1/2" NPS x 1-1/2" Lg, Steel, Zinc 2**

SE-0644-ZN2 **Hex Nipple, 1-1/2" NPS x 1-3/4" Lg, Steel, Zinc 2**

SE-4017-ZN1 **Hex Nut, 1-1/2" NPS, Iron**

Check Nut, 1-1/2" NPS, Alum

SE-0448 - [Set Screws] - PNC

1S=Single Set Screw
DS=Double Set Screw

Check Nut, 1-1/2" NPS, Steel, White Zinc

SE-0670 - [Set Screws] - ZN1

1S=Single Set Screw
DS=Double Set Screw

Note: 1. All assemblies are supplied standard with stainless steel fasteners.
2. See Reference Section for available paint colors.

SE-0360-PNC **Lockring, Serrated, Alum**

SE-4029-BRS **Lockring, Serrated, Brass**

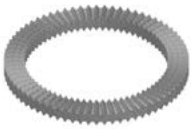

SE-0451-PNC **Lockring, Double Serrated, Alum**

SE-4125-PNC **Conduit Locknut, 1-1/2" NPS, w/ Serrations, Zinc 1**

SE-4048-ZN1 **Conduit Locknut, 3/4" NPT, Zinc 1**

ISO 9001 www.intlcert.com

Hardware

SE-0375-SS **Slotted Washer, Stainless**

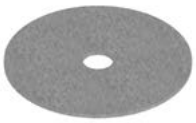

SE-4113-SS **Washer, Stainless**
0.39" ID x 2.44" OD x .06" THK

SE-4061-SS **Washer, Stainless**
1.97" ID x 2.61" OD x .06" THK

SE-4061-ZN1 **Washer, Steel, Zinc 1**
1.92" ID x 2.61" OD x .06" THK

SE-0367-PNC **Washer, Nylon**
1.93" ID x 2.69" OD x .12" THK

SE-0354-PNC **Gasket, Neoprene**

AB-0278-PNC **Gasket, Slotted Tri-Bolt, Neoprene**

Hardware

SE-0449-PNC **Grommet, 1-1/2" w/ Diaphragm Neoprene**

AB-0218-PNC **Adapter Ring, 3M, Alum**

SE-0477-PNC **ICC Ped Head Spacer, Alum**

SE-0577-GLV **Reducer Bushing, 1-1/2" NPT x 1/2" NPT, Galvanized Iron**

SE-0471-GLV **Reducer Bushing, 1-1/2" NPT x 3/4" NPT, Galvanized Iron**

SE-0565-GLV **Reducer Bushing, 1-1/2" NPT x 1" NPT, Galvanized Iron**

SE-4011-PNC **Insulator Bushing, 1-1/2" NPS, Black Plastic**

SE-4028-ZN1 **CGB, 3/4", .55" to .65" Wire, Zinc 1**

SE-0490-ZN1 **CGB, 3/4", .55" to .75" Wire, Zinc 1**

SE-4216-ZN1 **CGB, 1", .55" to .65" Wire, Zinc 1**

Hardware

Notched Coupling, 1-1/2" NPS x 2", Alum

SE-0346 - [ ] Coating

PNC=Process No Color
P_ _=Paint

Notched Coupling, 1-1/2" NPS x 2", Steel

SE-4170 - [ ] Coating

GLV=Galvanized
P_ _=Paint

Notched Coupling, Steel 1-1/2" NPS x 2" w/ Lock Ring

SE-3254 - [ ] Lock Ring - [ ] Coating

Blank=Alum
BRS=Brass

GLV=Galvanized
P_ _=Paint

Note: 1. All assemblies are supplied standard with stainless steel fasteners.
2. Double set screw option available. Specify by including -DS in the part number, i.e., SE-0346-DS-PNC.
3. See Reference Section for available paint colors.

Slip Connector, 1-1/2" NPS, Alum

SE-0535 - [ ] Coating

PNC=Process No Color
P_ _=Paint

Tube Saddle, 1-1/2" NPS, Alum

AB-0262 - [ ] Coating

PNC=Process No Color
P_ _=Paint

Tube Saddle Kit, 1-1/2" NPS w/ 5/16" V-Bolts & Hardware, Alum

AB-3048 - [ ] Coating

PNC=Process No Color
P_ _=Paint

Note: 1. All assemblies are supplied standard with stainless steel fasteners.
2. See Reference Section for available paint colors.

ISO 9001
www.intlcert.com

Banding Products

BANDING

Catalog Number	Width Inches	Width mm	Thickness Inches	Thickness mm	Weight Lbs	Weight Kg
TYPE 201 STAINLESS STEEL - *100 Ft. Per Roll*						
US-8122-04	1/2	12.70	0.030	0.76	5.1	2.4
US-8122-05	5/8	15.88	0.030	0.76	6.4	3.0
US-8122-06	3/4	19.05	0.030	0.76	7.7	3.6
TYPE 316 STAINLESS STEEL BAND - *100 Ft. Per Roll*						
US-8124-04	1/2	12.70	0.030	0.76	5.1	2.4
US-8124-05	5/8	15.88	0.030	0.76	6.4	3.0
US-8124-06	3/4	19.05	0.030	0.76	7.7	3.6

HEAVY DUTY (HD) BANDING

Heavy Duty Band is available in type 201. HD Band is designed for heavy duty applications and 1-1/4", 201 stainless steel band has a breaking strength of approximately 5500 lbs. We recommend double wrapping for maximum strength.

Catalog Number	Width Inches	Width mm	Thickness Inches	Thickness mm	Weight Lbs	Weight Kg
TYPE 201 HEAVY DUTY STAINLESS STEEL BAND - *100 Ft. Per Roll*						
US-8124-30	3/4	19.05	0.044	1.12	11.6	5.4
US-8124-31	1	25.40	0.044	1.12	13.7	6.4
US-8124-32	1-1/4	31.75	0.044	1.12	17.2	8.0

BAND-STRAP .024" (.061mm) THICK - *200 - 300 Stainless Steel*

Catalog Number	Width Inches	Width mm	Weight Lbs	Weight Kg	Package Quantity
US-8121-34	1/2	12.70	4.08	1.85	100 Ft. Roll
US-8121-35	5/8	15.88	5.09	2.31	100 Ft. Roll
US-8121-36	3/4	19.05	6.11	2.77	100 Ft. Roll
US-8121-28	1/2	12.70	8.15	3.70	200 Ft. Roll
US-8121-29	5/8	15.88	10.19	4.62	200 Ft. Roll
US-8121-30	3/4	19.05	12.23	5.54	200 Ft. Roll

BAND TOOL

The USA BAND TOOL is a forged double-plated tool capable of tensioning over 2400 lbs. The banding tool has a built-in cutter and a spring loaded gripper lever. The spin handle has a large retaining ring to keep the handle in place and can be used to hang on a tool belt.

Catalog Number	Description
US-8120-01	The USA Band Tool, Wt. 4.4 lbs (2.0 kg) - Package Quantity 1
US-8120-43	Close Quarter Tension Nut. Replaces tool tension handle when space is limited. Pacakge Quantity 1
US-8120-06	Tension Screw/Handle kit - Package Quantity 1

HEAVY DUTY BAND TOOL

The Heavy Duty TOOL must be used with all Heavy Duty Bands.
The HD TOOL is 16-1/2 inches long and is capable of up to 6,000 lbs. of tensioning.

Catalog Number	Description
US-8121-10	The Heavy Duty Tool, Wt 11.7 lbs (5.3 Kg) - Package Quantity 1

Buckles

BUCKLES

Catalog Number	Width Inches	Width mm	Weight Lbs	Weight Kg
TYPE 201 STAINLESS STEEL BUCKLES - *Package Quantity 100*				
US-8122-54	1/2	12.70	2.1	1.0
US-8122-55	5/8	15.88	2.4	1.1
US-8122-56	3/4	19.05	3.7	1.7
TYPE 316 STAINLESS STEEL BUCKLES - *Package Quantity 100*				
US-8124-54	1/2	12.70	2.1	1.0
US-8124-55	5/8	15.88	2.4	1.1
US-8124-56	3/4	19.05	3.7	1.7
GALVANIZED CARBON STEEL BUCKLES - *Package Quantity 100*				
US-8123-54	1/2	12.70	2.1	1.1
US-8123-55	5/8	15.88	2.4	1.1
US-8123-56	3/4	19.05	3.7	1.7

HEAVY DUTY BUCKLES

HD Buckles are offered in widths and metals to correspond to HD Band.
Clamps may be double wrapped for extra strength.

Catalog Number	Width Inches	Width mm	Weight Lbs	Weight Kg
TYPE 201/301 STAINLESS STEEL - *Package Quantity 25*				
US-8124-40	3/4	19.05	1.8	0.8
US-8124-41	1	25.40	2.4	1.1
US-8124-42	1-1/4	31.75	3.2	1.4

BAND CLIPS

Catalog Number	Width Inches	Width mm	Weight Lbs	Weight Kg
TYPE 201 STAINLESS STEEL BAND CLIPS - *Package Quantity 100*				
US-8121-54	1/2	12.70	2.1	1.0
US-8121-55	5/8	15.88	2.4	1.1
US-8121-56	3/4	19.05	3.7	1.7

A-SCREW LOCK BUCKLES - *Stainless Steel*

Catalog Number	Width Inches	Width mm	Weight Lbs	Weight Kg	Package Quantity
US-8127-24	1/2	12.70	2.1	1.0	25
US-8127-25	5/8	15.88	2.4	1.1	25
US-8127-26	3/4	19.05	3.7	1.7	25

Width Inches	Thick	201 Force	316 Force	Thick	Force	Thick	Force	Thick	Force
1/2	0.030	1500	1200	0.015	600	0.020	850	0.025	1050
5/8	0.030	1875	1500	0.015	750	-	-	-	-

www.pelcoinc.com - sales@pelcoinc.com - 405-340-3434 - fax: 405-340-3435

Brackets

SIGN MOUNTING BRACKETS

Catalog Number	Discription	Weight Lbs	Kg
1-BOLT STRAIGHT LEG BRACKET (.075" THICK) - *Package Quantity 50*			
US-8121-00	Stainless Steel with SS Bolt, Washer and Fiber Washer	7.3	3.3
US-8120-04	Stainless Steel without Bolt or Washer		
US-8120-11	Zinc Plated Steel with Carbon Bolt, Washer and Fiber Washer	7.6	3.5
1-BOLT FLARED LEG BRACKET (.075" THICK) - *Package Quantity 50*			
US-8120-21	Stainless Steel with SS Bolt and Washer	7.6	3.5
US-8120-31	Zinc Plated Steel with Carbon Bolt, Washer and Fiber Washer	7.4	3.4

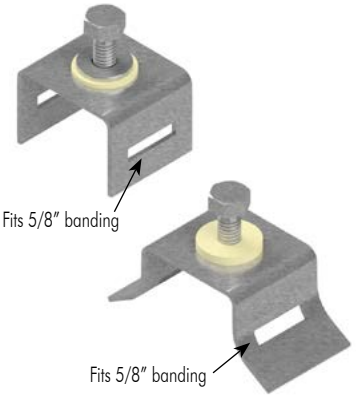

BOLTS, WASHERS for BRACKETS - *50 Per Box*

Catalog Number	Description
US-8120-02	Bolts Stainless Steel for Stainless Brackets (5/16 - 18 x 3/4" Long Hex Head)
US-8121-80	Bolts Zinc Plated Steel for Carbon Steel Brackets (5/16 - 18 x 3/4" Long Hex Head)
US-8120-03	Fiber Washers

MOUNTING PLATES - *Per Each - Secure with band and buckles.*

Strapping holds this extruded aluminum mounting plate to utility poles.

Catalog Number	Description	Weight Lbs/Ea
US-8125-10	Light Duty, 1-1/2" x 4-3/4" w/ 5/8"-11 x 2" Plated Bolt	0.57
US-8125-12	Heavy Duty, 1-1/2" x 5-1/4" w/ 5/8"-11 x 2" Plated Bolt	0.78
US-8125-11	Heavy Duty, 1-1/2" x 5-1/4" w/ 5/8"-11 x 3" Plated Bolt	0.84
US-8125-13	Heavy Duty, 1-1/2" x 5-1/4" w/ 3/4"-11 x 3" Plated Bolt	1.22

USA BOLT / CLAMP - *Per Each*

Extruded aluminum fittings with zinc plated bolt, nut and washer.
To be used with USA Band for mounting pole hardware.

Catalog Number	Description	Weight Lbs/Ea
US-8500	Bolt/Clamp for use with 3/4" USA BAND band (US-8122-06). Includes plated nut, bolt 3/8" - 16 x 16" and washer.	0.43
US-8504	Bolt/Clamp for use with 1-1/4" USA BAND band (US-8124-62). Includes plated nut, bolt 5/8" - 11 x 8" and washer.	1.48

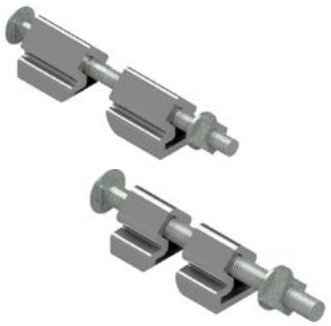

Bristol Series Luminaire

The Bristol Luminaires are available in metal halide, high pressure sodium, or LED and provide the look and charm of history. A unique modular electrical unit provides easy access for service. The Bristol Luminaire can be customized for a personalized style and requirement by selecting various options as indicated below.

AP- [ ] - [ ] - [ ] - [ ] - [ ] - [ ] - [ ] - [ ] - [ ]

Model - Wattage - Voltage - Photocell - Tenon Adapter - Globe - Finial/ Color - Rib/ Color - P_ _=Paint

Wattage:

AP-0207 HPS	AP-0208 MH	AP-7520 LED
50HPS	50MH	37W
100HPS	100MH	57W
150HPS	150MH	-
250HPS	250MH	-

Voltage:

AP-0207 HPS	AP-0208	AP-7520 LED
120V	120V	UNV
240V	240V	UNV
277V	277V	UNV
480V	480V	-

Note: All LED Luminaires are 120-277V

Photocell:

AP-0207 HPS	AP-0208 MH	AP-7520 LED	
NPC	NPC	NPC	None
PCS	PCS	7P	Socket Only
PC	PC	PC	w/ Photocell

Note: All LED Luminaires use 7-pin socket

Tenon Adapter:

AP-0207 HPS	AP-0208 MH	AP-7520 LED
TA	TA	TA

Note: Adapter 2-7/8" OD post to 3-1/2" ID fixture

Globe:

AP-0207 HPS	AP-0208 MH	AP-7520	
PLSM	PLSM	-	
PLLG	PLLG	PLLG	Polycarbonate Large
T3AC	T3AC	T3AC	Type III Acrylic
T5AC	T5AC	T5AC	Type V Acrylic
T3ACPR	T3ACPR	-	Type III Acrylic, Perforated Reflector
T5ACPR	T5ACPR	-	Type V Acrylic, Perforated Reflector
T3ACSR	T3ACSR	-	Type III Acrylic, Solid Reflector
T5ACSR	T5ACSR	-	Type V Acrylic, Solid Reflector
T3DS59	T3DS59	T3DS	Type III Acrylic, Dark Sky, Color
T5DS59	T5DS59	T5DS	Type V Acrylic, Dark Sky, Color

Note: 59 refers to P59 Textured Black, others colors available

Finial/Color:

AP-0207	AP-0208	AP-7520	
BL59	BL59	BL59	3" Ball, Color
ST59	ST59	ST59	Steeple, Color
SI59	SI59	SI59	Spire, Color
FL59	FL59	FL59	Fleur, Color

Note: 59 refers to P59 Textured Black, others colors available

Ribs/Color:

AP-0207	AP-0208	AP-7520	
T59	T59	T59	Tall, Color
TO59	TO59	TO59	Tall Open, Color
S59	S59	S59	Short, Color
SO59	SO59	SO59	Short Open, Color

Notes: 59 refers to P59 Textured Black, others colors available
Decorative Ribs not available on small poly globe.

AP-0207- Bristol High Pressure Sodium
AP-0208- Bristol Metal Halide
AP-7520- Bristol LED

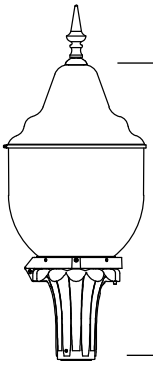

Acrylic Globe

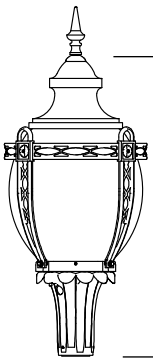

Polycarbonate Globe
w/ Decorative Ribs

Note: 1. See Reference Section for available paint colors.
2. Retrofit Kits are available to easily convert Pelco's exisitng Bristol Luminaires to LED.

Windsor Series Luminaire

The Windsor Luminaires are available in metal halide, high pressure sodium, or LED. The carriage type luminaires are antique in appearance with a modular electrical unit for easy service access. The lighting panels have unique photometrics that give the appearance of multiple light sources. The Windsor Luminaire can be customized by selecting various options as indicated below.

AP- [ ] - [ ] - [ ] - [ ] - [ ] - [ ]

Model | Wattage | Voltage | Photocell | Finial/ Color | P_ _=Paint

AP-0216- Windsor High Pressure Sodium
AP-0217- Windsor Metal Halide
AP-7521- Windsor LED

Wattage:

AP-0216	AP-0217	AP-7521
50HPS	-	37W
100HPS	100MH	57W
-	150MH	-
-	175MH	-

Voltage:

AP-0216	AP-0217	AP-7521
120V	120V	UNV
208V	208V	UNV
240V	240V	UNV
277V	277V	UNV
480V	480V	480V

Note: All LED Luminaires are 120-277V

Photocell:

AP-0216	AP-0217	AP-7521	
NPC	NPC	NPC	None
PCS	PCS	7P	Socket Only
PC	PC	PC	w/ Photocell

Note: All LED Luminaires use 7-pin socket

Finial/Color:

AP-0216	AP-0217	AP-7521	
BL59	BL59	BL59	3" Ball, Color
ST59	ST59	ST59	Steeple, Color
SI59	SI59	SI59	Spire, Color
FL59	FL59	FL59	Fleur, Color

Note: 59 refers to P59 Textured Black, others colors available

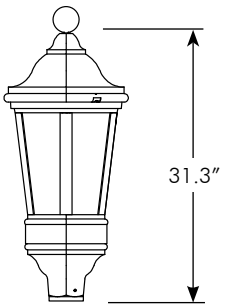

Note: 1. See Reference Section for available paint colors.
2. Retrofit Kits are available to easily convert Pelco's exisitng Windsor Luminaires to LED.

ISO 9001 www.intlcert.com

Newport Series Luminaire

The Newport Luminaires are available in metal halide or high pressure sodium. The smaller design creates an atmosphere of simplicity, while the unique modular electrical unit provides easy access for service. The Newport Luminaire can be customized by selecting various options as indicated below.

AP- [ ] - [ ] - [ ] - [ ] - [ ] - [ ] - [ ]

Model | Wattage | Voltage | Photocell | Globe | Finial/ Color | P_ _=Paint

AP-0333- Newport High Pressure Sodium
AP-0334- Newport Metal Halide

Wattage:

AP-0333	AP-0334
100HPS	100MH

Voltage:

AP-0333	AP-0334
120V	120V
208V	208V
240V	240V
277V	277V

Photocell:

AP-0333	AP-0334	
NPC	NPC	None
PCS	PCS	Socket Only
PC	PC	w/ Photocell

Globe:

AP-0333	AP-0334	
PLSM	PLSM	Polycarbonate Small
T3AC	T3AC	Type III Acrylic
T5AC	T5AC	Type V Acrylic
T3ACPR	T3ACPR	Type III Acrylic, Perforated Reflector
T5ACPR	T5ACPR	Type V Acrylic, Perforated Reflector
T3ACSR	T3ACSR	Type III Acrylic, Solid Reflector
T5ACSR	T5ACSR	Type V Acrylic, Solid Reflector

Finial/Color:

AP-0333	AP-0334	
BL59	BL59	3" Ball, Color
ST59	ST59	Steeple, Color
SI59	SI59	Spire, Color
FL59	FL59	Fleur, Color
SE59	SE59	Spear, Color

Note: 59 refers to P59 Textured Black, others colors available

3" Ball | Steeple | Spire | Fleur | Spear

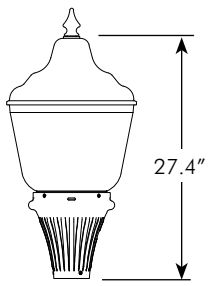

Note: 1. See Reference Section for available paint colors.

Lexington Series Luminaire

The Lexington LED Luminaire has a simple elegant style, yet brings a state-of-the-art photometric and maintenance technology to a unit reminiscent of the 19th century. The Lexington Luminaire is designed for use with a 2-3/8″ diameter arm and can be customized by selecting various options as indicated below.

AP- [ ] - [ ] - [ ] - [ ] - [ ] - [ ] - [ ] - [ ] - [ ]

Model | Wattage | LED | Color Temp | Voltage | Photocell | Optics | Shade | P_ _=Paint

Wattage:

AP-7523	AP-7523	AP-7524
250HPS	250MH	136W

Color Temp:

AP-7523	AP-7523	AP-7524	
-	-	4K	4500 Kelvin

Voltage:

AP-7523	AP-7523	AP-7524
120V	120V	UNV
208V	208V	UNV
240V	240V	UNV
277V	277V	UNV
480V	480V	480V

Note: All LED Luminaires are 120-277V

Photocell:

AP-7523	AP-7523	AP-7524	
PC (3 pin)	PC (3 pin)	PC (7 pin)	Photocell
SC	SC	SC	Shorting Cap
PCS (3 pin)	PCS (3 pin)	PCS (7 pin)	w/ Photocell

Optics:

AP-7523	AP-7523	AP-7524	
T3DS59	T3DS59	T3DS	Type III Acrylic

Note: 59 refers to P59 Textured Black, others colors available

Shade:

AP-7501	
SHA	Spun Aluminum Shade

Paint:

AP-7501	
P59	Textured Black Powder Coat

AP-7523- Lexington Metal Halide
AP-7523- Lexington High Pressure Sodium
AP-7524- Lexington LED

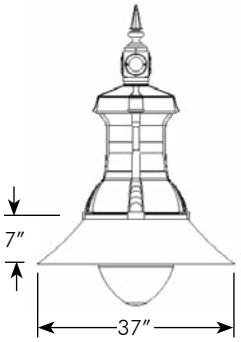

Decorative Finial & Spun Aluminum Shade

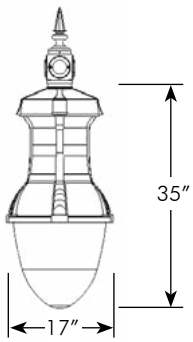

Decorative Finial & Twistlock Photocell

Note: 1. Custom colors may be available. Contact Pelco for specifics.

ISO 9001 www.intlcert.com

Bristol Series Wall Mount Luminaire

The Bristol Wall Mount Luminaires are available in metal halide, high pressure sodium, or LED and provide the look and charm of history. A unique modular electrical unit provides easy access for service. The Bristol Luminaire can be customized for a personalized style and requirement by selecting various options as indicated below.

AP- [ ] - [ ] - [ ] - [ ] - [ ] - [ ] - [ ] - [ ]

Model | Wattage | Voltage | Photocell | Globe | Finial/ Color | Rib/ Color | P_ _=Paint

Wattage:

AP-0378	AP-0367	AP-7522
50HPS	50MH	37W
100HPS	100MH	57W
150HPS	150MH	-
250HPS	250MH	-

Voltage:

AP-0378	AP-0367	AP-7522
120V	120V	UNV
240V	240V	UNV
277V	277V	UNV
480V	480V	-

Note: All LED Luminaires are 120-277V

Photocell:

AP-0378	AP-0367	AP-7522	
NPC	NPC	NPC	None
PCS	PCS	7P	Socket Only
PC	PC	PC	w/ Photocell

Note: All LED Luminaires use 7-pin socket

Globe:

AP-0378	AP-0367	AP-7522	
PLSM	PLSM	-	Polycarbonate Small
PLLG	PLLG	PLLG	Polycarbonate Large
T3AC	T3AC	T3AC	Type III Acrylic
T5AC	T5AC	T3AC	Type V Acrylic
T3ACPR	T3ACPR	-	Type III Acrylic, Perforated Reflector
T5ACPR	T5ACPR	-	Type V Acrylic, Perforated Reflector
T3ACSR	T3ACSR	-	Type III Acrylic, Solid Reflector
T5ACSR	T5ACSR	-	Type V Acrylic, Solid Reflector
T3DS59	T3DS59	T3DS	Type III Acrylic, Dark Sky, Color
T5DS59	T5DS59	T3DS	Type V Acrylic, Dark Sky, Color

Note: 59 refers to P59 Textured Black, others colors available

Finial/Color:

AP-0378	AP-0367	AP-7522	
BL59	BL59	BL59	3" Ball, Color
ST59	ST59	ST59	Steeple, Color
SI59	SI59	SI59	Spire, Color
FL59	FL59	FL59	Fleur, Color

Note: 59 refers to P59 Textured Black, others colors available

Ribs/Color:

AP-0378	AP-0367	AP-7522	
T59	T59	T59	Tall, Color
TO59	TO59	TO59	Tall Open, Color
S59	S59	S59	Short, Color
SO59	SO59	SO59	Short Open, Color

Note: 59 refers to P59 Textured Black, others colors available

AP-0378- Bristol High Pressure Sodium
AP-0367- Bristol Metal Halide
AP-7522- Bristol LED

3" Ball

Steeple

Spire

Fleur

Tall

Tall Open

Short

Short Open

Note: 1. See Reference Section for available paint colors.
2. Retrofit Kits are available to easily convert Pelco's exisitng Bristol Luminaires to LED.
3. Mounting hardware not included.

This page is intentionally left blank.

ISO 9001
www.intlcert.com

LED Luminaire Retrofits

Existing Bristol, Windsor, or Renassaince Luminaires can easily be converted to LED by replacing the electrical modules with LED Retrofit Kits.

Bristol LED Retrofit Kit, Alum

AP-0655 - [Wattage] - [Voltage] - [Photocell Socket] - [Coating]

Wattage	Voltage	Photocell Socket	Coating
37W=37 Watt 57W=57 Watt	UNV=120-277V	NPC=None 7P=7-Pin Socket	PNC=Process No Color P_ _=Paint

Bristol LED Retrofit Kit w/ Top Plate for 7-Pin Alum

AP-0657 - [Wattage] - [Voltage] - [Photocell Socket] - [Coating]

Wattage	Voltage	Photocell Socket	Coating
37W=37 Watt 57W=57 Watt	UNV=120-277V	NPC=None 7P=7-Pin Socket	PNC=Process No Color P_ _=Paint

Windsor LED Retrofit Kit, Alum

AP-0658 - [Wattage] - [Voltage] - [Photocell Socket] - [Coating]

Wattage	Voltage	Photocell Socket	Coating
37W=37 Watt 57W=57 Watt	UNV=120-277V	NPC=None 7P=7-Pin Socket	PNC=Process No Color

Renaissance LED Retrofit Kit, Alum

AP-0656 - [Wattage] - [Voltage] - [Photocell] - [Coating]

Wattage	Voltage	Photocell	Coating
80W=80 Watt	120V=120 Volt	NPC=None	PNC=Process No Color

Note: 1. See Reference Section for available paint colors.

Arms, Column, and Wall Mounts

Pelco's twin arms can be mounted to a fluted or tapered pole. The twin arms and wall mount can accommodate the Bristol, Windsor, or Newport luminaire and are available with a variety of finials. Pelco's decorative column mount is availiable with an optional collar for additional ornamentation.

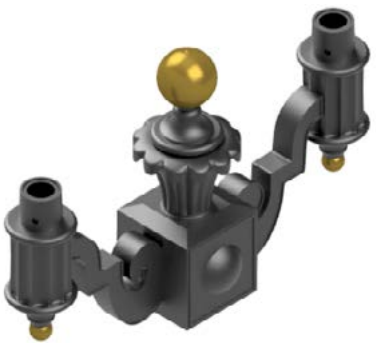

Twin Arm Assy, Fits 2-7/8" Pole Tenon, Alum w/ 3-1/2" Luminaire Tenons, 33" CTC

AP-8203 - [Finial/Color] - [Paint]

Finial/Color: BL_ _=2" Ball, SI_ _=Spire, SE_ _=Steeple, FL_ _=Fleur

Paint: P_ _=Paint

Note:
Finial may be ordered as P28 Gold or same color as assembly, i.e., AP-8203-BL28-P59, for Gold Ball finial and Textured Black assembly.

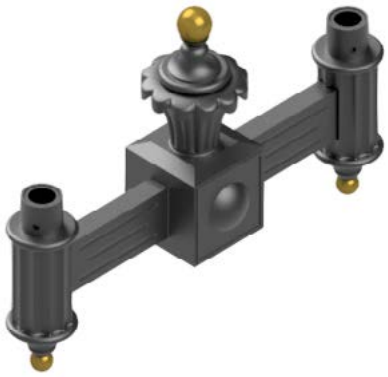

Twin Arm Assy, Fits 2-7/8" Pole Tenon, Alum w/ 3-1/2" Luminaire Tenons, 35" CTC

AP-8374 - [Finial/Color] - [Paint]

Finial/Color: BL_ _=2" Ball, SI_ _=Spire, SE_ _=Steeple, FL_ _=Fleur

Paint: P_ _=Paint

Note:
Finial may be ordered as P28 Gold or same color as assembly, i.e., AP-8374-BL28-P59, for Gold Ball finial and Textured Black assembly.

Wall Mount Arm Assy, Alum 16-1/2" Offset from Wall

AP-8230 - [Tenon] - [Finial/Color] - [Paint]

Tenon: 2.8=2-13/16" OD, 3.5=3-1/2" OD

Finial/Color: BL_ _=2" Ball, SI_ _=Spire, SE_ _=Steeple, FL_ _=Fleur

Paint: P_ _=Paint

Note:
Finial may be ordered as P28 Gold or same color as assembly, i.e., AP-8230-BL28-P59, for Gold Ball finial and Textured Black assembly.

Column Mount, Alum w/ 3-1/2" Luminaire Tenon 8-1/2" Bolt Circle for 1/2" Hardware

AP-8195 - [Collar] - [Paint]

Collar: Blank=No Collar, OC=Ornamental Collar

Paint: P_ _=Paint

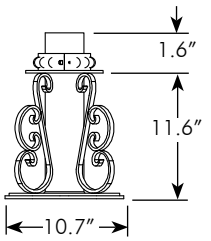

AP-8195-OC

Note: 1. See Reference Section for available paint colors.
2. Mounting hardware not included.

Post Top Luminaire Poles

Pelco manufactures a variety of Lighting Poles, straight, fluted, and tapered, that are available for post top mounted luminaires. Poles vary in size, shape, height, and material, and are designed to fit any requirement.

Light Pole, 3-1/2" OD Steel w/ Hand Hole

AP-0220 - [Height] - [Coating]

Height: 05=5′, 08=8′, 10=10′, 12=12′, 14=14′

Coating: P__=Paint

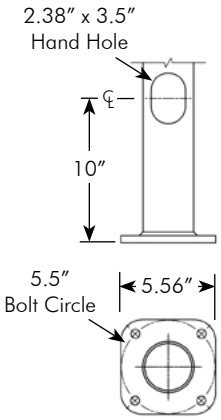

Light Pole, 3-1/2" OD Steel w/ GFCI Option

AP-0376 - [Height] - [GFCI] - [Coating]

Height: 05=5′, 08=8′, 10=10′, 12=12′, 14=14′

GFCI: Blank=w/o Kit, GFCI=w/ Kit

Coating: P__=Paint

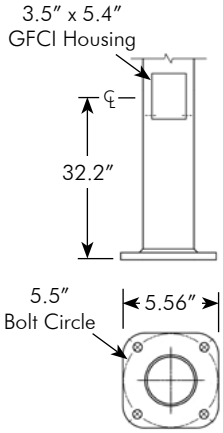

ABS Bases:

AP-0804
Old Towne I

AP-0803
Rochester

AP-0810
Hamilton

Anchors:

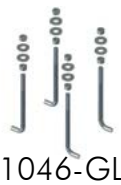

AP-1046-GLV
Anchor Bolts Set,
1/2"-13NC

AP-1049-GLV
Anchor Bolt Cage,
1/2"-13NC

Aluminum Bases:

AP-0801
Old
Towne I

AP-0814
LeGrande

AP-0811
Country
Club

AP-0820
Huntington

PB-5416
Octagonal

AP-0817
Oxford

Note: 1. See Reference Section for available paint colors.
2. For more indepth information on Bases see page T15-25 through T15-29.
3. For Anchors see sections T11 and T12.

Post Top Luminaire Poles

Pelco manufactures a variety of Lighting Poles, straight, fluted, and tapered, that are available for post top mounted luminaires. Poles vary in size, shape, height, and material, designed to fit any need.

Light Pole, 3-1/2" OD Steel w/ Lower GFCI Option

AP-0302 - [Height] - [GFCI] - [Coating]

Height:
05=5'
08=8'
10=10'
12=12'
14=14'

GFCI:
Blank=w/o Kit
GFCI=w/ Kit

Coating:
P__=Paint

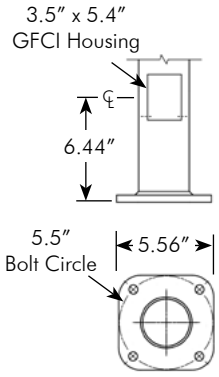

ABS Bases:

AP-0803
Rochester I

AP-0810
Hamilton

Anchors:

AP-1046-GLV
Anchor Bolts Set,
1/2"-13NC

AP-1049-GLV
Anchor Bolt Cage,
1/2"-13NC

Aluminum Bases:

AP-0811
Country
Club

Note: 1. See Reference Section for available paint colors.
2. For more indepth information on Bases see page T15-25 through T15-29.
3. For Anchors see sections T11 and T12.

ISO 9001
www.intlcert.com

Post Top Luminaire Poles

Pelco manufactures a variety of Lighting Poles, straight, fluted, and tapered, that are available for post top mounted luminaires. Poles vary in size, shape, height, and material, designed to fit any need.

Light Pole, 4" Fluted, Alum w/ 3-1/2" OD x 2-7/8" Long Tenon, w/ Hand Hole & Grounding Lug

AP-8122 - [Height] - [Coating]

Height: 10=10′, 12=12′, 14=14′

Coating: P__=Paint

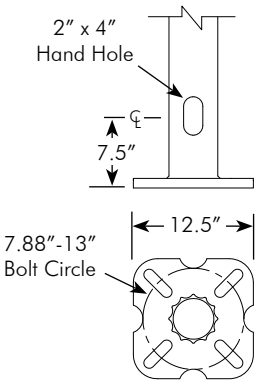

Light Pole, 4" Fluted, Alum w/ 3-1/2" OD x 2-7/8" Long Tenon, w/ Hand Hole & Grounding Lug

AP-8468 - [Height] - [Coating]

Height: 15=15′, 18=18′, 20=20′

Coating: P__=Paint

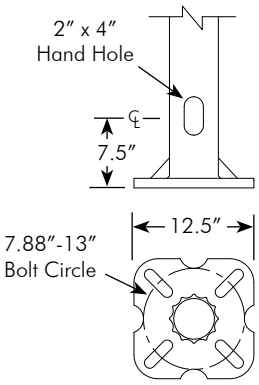

Anchors:

AP-1019-GLV
Anchor Bolts Set,
3/4"-10NC

AP-1089-GLV
Anchor Bolt Cage,
3/4"-10NC

Aluminum Bases:

AP-0814
LeGrande

AP-0819
Manchester

AP-0816
Hamilton

PB-5414
Octagonal

AP-0817
Oxford

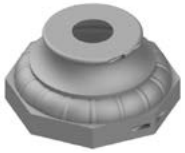

Note: 1. See Reference Section for available paint colors.
2. For more indepth information on Bases see page T15-25 through T15-29.
3. For Anchors see sections T11 and T12.

This page is intentionally left blank.

Post Top Luminaire Poles

Pelco manufactures a variety of Lighting Poles, straight, fluted, and tapered, that are available for post top mounted luminaires. Poles vary in size, shape, height, and material, designed to fit any need.

Light Pole, Fluted Tapered, Steel w/ 3-1/2" OD x 3-1/2" Long Tenon, GFCI Option

AP-8700 - [Height] - [GFCI] - [Coating]

Height	GFCI	Coating
8=8′ 10=10′	Blank=w/o Kit GFCI=w/ Kit	GLV=Galvanized P_ _=Paint

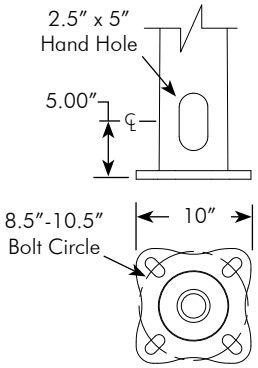

ABS Bases:

AP-0809-5.63-13.13
Rochester II
(w/o GFCI)

AP-0810-5.81-13.13
Hamilton

Anchors:

AP-1019-GLV
Anchor Bolts Set,
3/4"-10NC

AP-1089-GLV
Anchor Bolt Cage,
3/4"-10NC

Aluminum Bases:

AP-0814-5.63
LeGrande
(w/o GFCI)

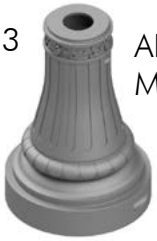

AP-0819-5.7
Manchester

AP-0816-5.75
Hamilton

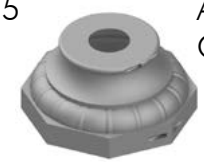

AP-0817-6F
Oxford

Note: 1. See Reference Section for available paint colors.
2. For more indepth information on Bases see page T15-25 through T15-29.
3. For Anchors see sections T11 and T12.

Post Top Luminaire Poles

Pelco manufactures a variety of Lighting Poles, straight, fluted, and tapered, that are available for post top mounted luminaires. Poles vary in size, shape, height, and material, designed to fit any need.

Direct Bury Light Pole, Tapered Steel, 11 Gauge, 5.8" Butt x 19' Tall 3-1/2" OD x 3" Long Tenon, w/ Hand Hole Cover & Grounding Lug

AP-3056 - Coating ☐
P__=Paint

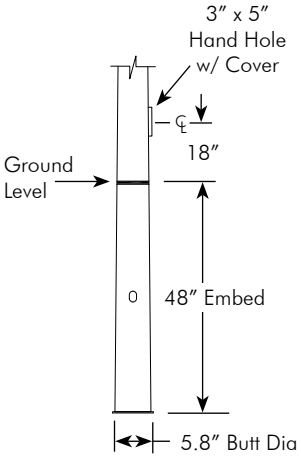

ABS Bases:

AP-0809-4.88-5.63
Rochester II

AP-0803-4.88-5.63
Rochester I

AP-0817-5.25
Oxford

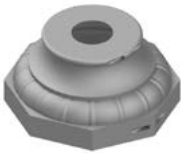

Aluminum Bases:

AP-0814-4.88
LeGrande

AP-0811-5.00
Country Club

AP-0819-5.00
Manchester

AP-0816-5.00
Hamilton

Note: 1. See Reference Section for available paint colors.
2. For more indepth information on Bases see page T15-25 through T15-29.

Post Top Luminaire Poles

Pelco manufactures a variety of Lighting Poles, straight, fluted, and tapered, that are available for post top mounted luminaires. Poles vary in size, shape, height, and material, designed to fit any need.

Direct Bury Light Pole, Tapered Steel, 11 Gauge, 7.5" Butt x 25' Tall 3-1/2" OD x 3" Long Tenon, w/ Hand Hole Cover & Grounding Lug

AP-3057 - Coating
P_ _=Paint

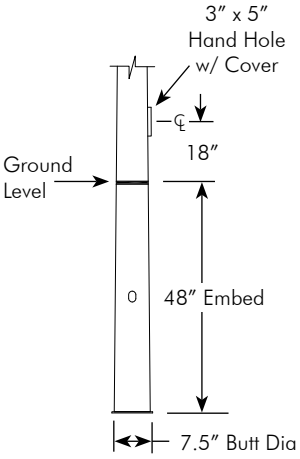

ABS Bases:

AP-0809-6.56-7.25
Rochester II

Aluminum Bases:

AP-0802-6.63
Ornamental

AP-0819-6.69
Manchester

AP-0816-6.75
Hamilton

AP-0817-6.88
Oxford

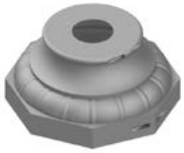

Note: 1. See Reference Section for available paint colors.
2. For more indepth information on Bases see page T15-25 through T15-29.

Majestic Roadway Luminaire Poles

The Majestic Roadway Lighting Poles are available for single or twin luminaires and with 6′ or 8′ arms fabricated with a 29″ rise. The fluted tapered steel pole offers great strength and durability, with the Hamilton base completing the classic decorative look.

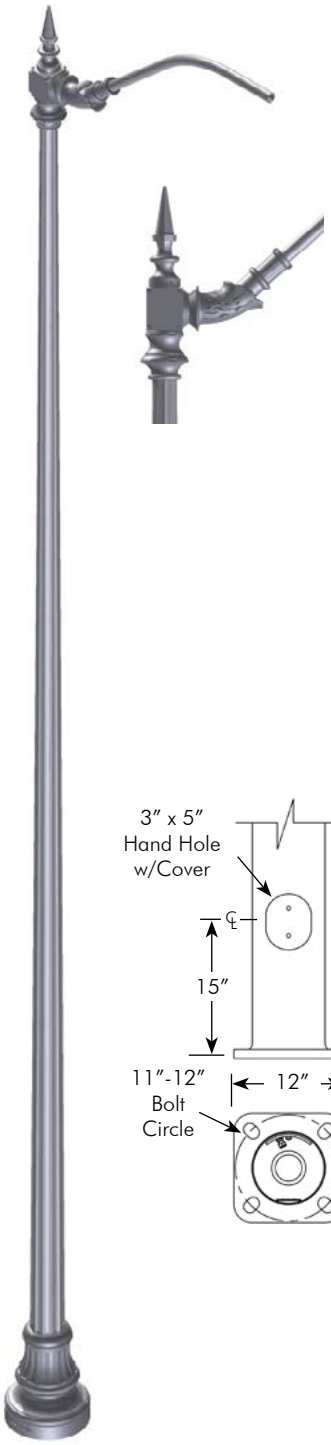

Pole Height	Arm Length	Arm	Part Number	Allowable EPA (ft^2) per arm at 90 mph with max. luminaire weight of 60 lbs	Allowable EPA (ft^2) per arm at 100 mph with max. luminaire weight of 60 lbs
30′-0″	6′-0″	Single	AP-8327	7.0	5.6
	8′-0″	Single	AP-8347	4.6	3.6

Note:
Majestic Poles come standard with Hamilton Base, for optional Hamilton Base w/ Riser specify by adding -BR in the part number, i.e., AP-8327-BR-P59
EPA=Projected area of luminaire multiplied by coefficient of drag
Compliant with AASHTO 2013

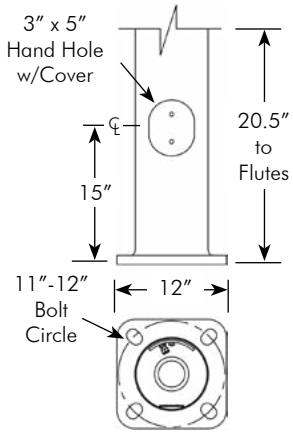

Anchors:

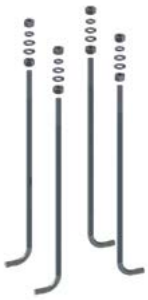

AP-1007-3-GLV
Anchor Bolts Set,
1″-8NC
w/ Template

AP-3129-GLV
Anchor Bolt Cage,
1″-8NC

PB-5372-GLV
6″ Foundation
Anchor

Aluminum Bases:

AP-0816-7.75
Hamilton
(Standard)

AP-0823-7.75
Hamilton w/ Riser
(Optional)

Note: 1. See Reference Section for available paint colors.
2. For more indepth information on Bases see page T15-25 through T15-29.
3. For Anchors see sections T11 and T12.

ISO 9001 www.intlcert.com

Majestic Roadway Luminaire Poles

The Majestic Roadway Lighting Poles are available for single or twin luminaires and with 6′ or 8′ arms fabricated with a 29″ rise. The fluted tapered steel pole offers great strength and durability, with the Hamilton base completing the classic decorative look.

Pole Height	Arm Length	Arm	Part Number	Allowable EPA (ft^2) per arm at 90 mph with max. luminaire weight of 60 lbs	Allowable EPA (ft^2) per arm at 100 mph with max. luminaire weight of 60 lbs
30′-0″	6′-0″	Single	AP-8328	7.0	5.6
	8′-0″	Single	AP-8348	4.6	3.6

Note:
Majestic Poles come standard with Hamilton Base, for optional Hamilton Base w/ Riser specify by adding -BR in the part number, i.e., AP-8347-BR-P59
EPA=Projected area of luminaire multiplied by coefficient of drag
Compliant with AASHTO 2013

Anchors:

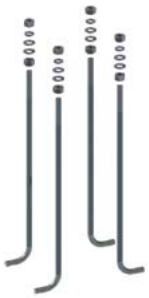

AP-1007-3-GLV
Anchor Bolts Set,
1″-8NC
w/ Template

AP-3129-GLV
Anchor Bolt Cage,
1″-8NC

PB-5372-GLV
6″ Foundation
Anchor

Aluminum Bases:

AP-0816-7.75
Hamilton
(Standard)

AP-0823-7.75
Hamilton w/ Riser
(Optional)

Note: 1. See Reference Section for available paint colors.
2. For more indepth information on Bases see page T15-25 through T15-29.
3. For Anchors see sections T11 and T12.

Traditional Roadway Luminaire Poles

The Traditional Roadway Luminaire Poles are available in 22-1/2', 25', and 30' heights. They are provided with either 6' or 8' single or twin arms, fabricated with a 26" rise. The steel tapered poles offer an affordable graceful look that can accept a variety of decorative bases or be provided with simple nut covers.

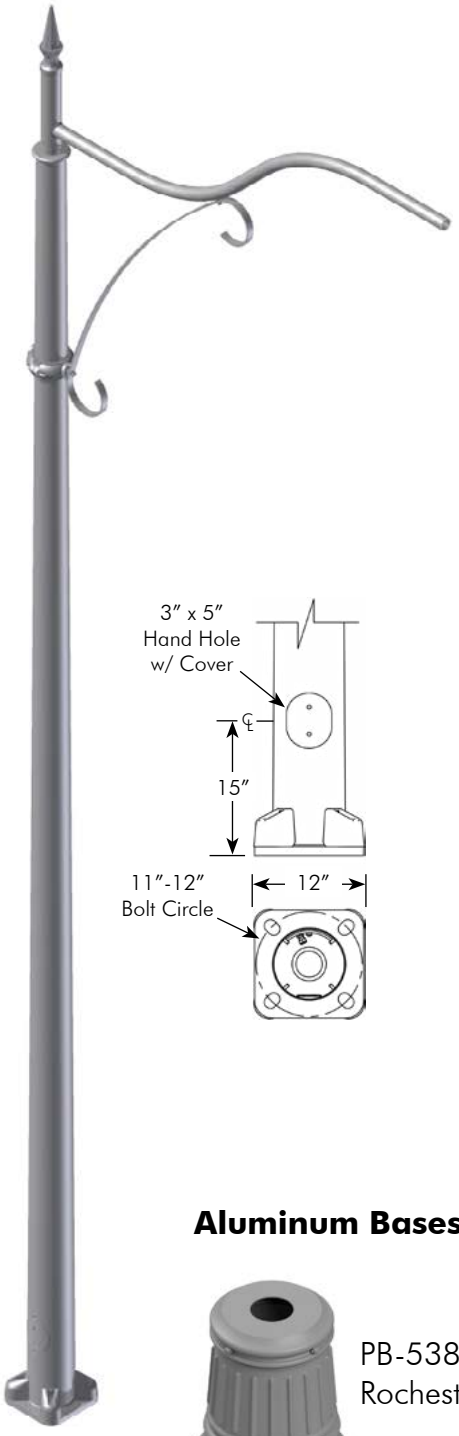

Pole Height	Arm Length	Arm	Part Number	Allowable EPA (ft^2) per arm at 90 mph with max. luminaire weight of 60 lbs	Allowable EPA (ft^2) per arm at 100 mph with max. luminaire weight of 60 lbs
22'-6"	8'-0"	Single	AP-8489	5.0	3.9
25'-0"	8'-0"	Single	AP-8556	4.8	3.8
30'-0"	8'-0"	Single	AP-8301	4.6	3.6

Note:
Bolt/Nut Covers are available. Specify by adding -BC in the part number, i.e., AP-8301-BC-P59
EPA=Projected area of luminaire multiplied by coefficient of drag
Compliant with AASHTO 2013

Anchors:

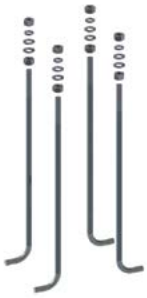

AP-1007-3-GLV
Anchor Bolts Set,
1"-8NC
w/ Template

AP-3129-GLV
Anchor Bolt Cage,
1"-8NC

PB-5372-GLV
6" Foundation
Anchor

Aluminum Bases:

PB-5384-7.69
Rochester

AP-0802-7.75
Ornamental

AP-0816-7.81
Hamilton

AP-0817-8.00
Oxford

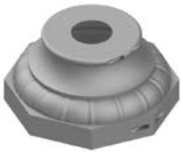

Note: 1. See Reference Section for available paint colors.
2. For more indepth information on Bases see page T15-25 through T15-29.
3. For Anchors see sections T11 and T12.

ISO 9001 www.intlcert.com

Traditional Roadway Luminaire Poles

The Traditional Roadway Luminaire Poles are available in 22-1/2', 25', and 30' heights. They are provided with either 6' or 8' single or twin arms, fabricated with a 26" rise. The steel tapered poles offer an affordable graceful look that can accept a variety of decorative bases or be provided with simple nut covers.

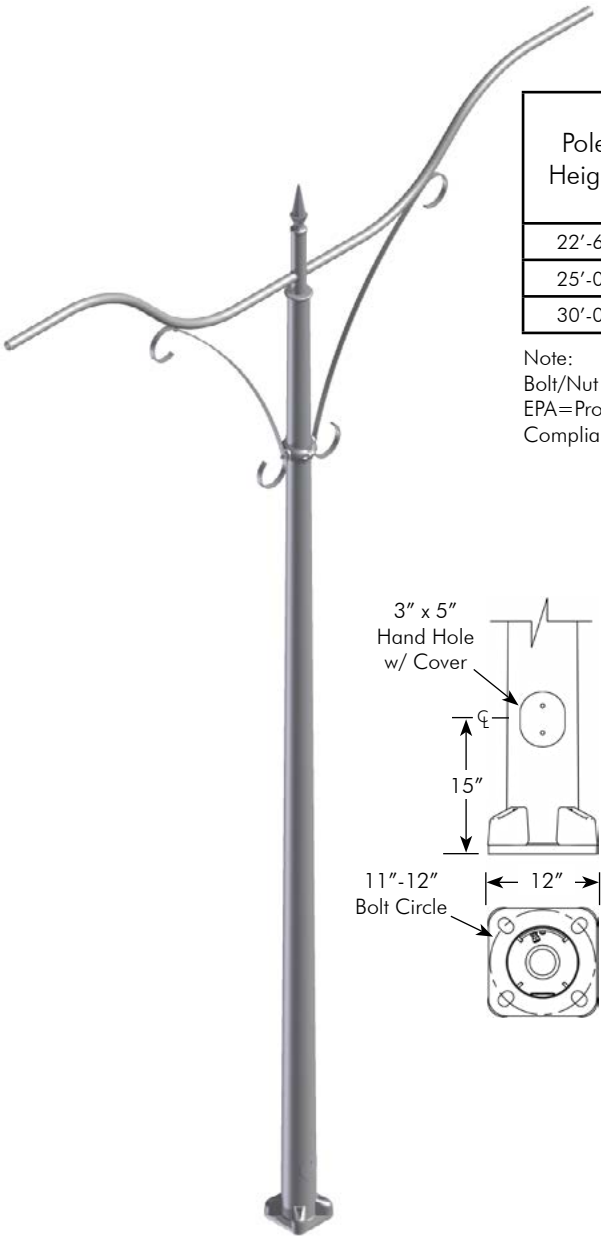

Pole Height	Arm Length	Arm	Part Number	Allowable EPA (ft^2) per arm at 90 mph with max. luminaire weight of 60 lbs	Allowable EPA (ft^2) per arm at 100 mph with max. luminaire weight of 60 lbs
22'-6"	8'-0"	Twin	AP-8490	5.0	3.9
25'-0"	8'-0"	Twin	AP-8563	4.8	3.8
30'-0"	8'-0"	Twin	AP-8302	4.6	3.6

Note:
Bolt/Nut Covers are available. Specify by adding -BC in the part number, i.e., AP-8302-BC-P59
EPA=Projected area of luminaire multiplied by coefficient of drag
Compliant with AASHTO 2013

Anchors:

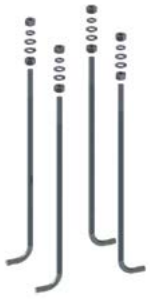

AP-1007-3-GLV
Anchor Bolts Set,
1"-8NC
w/ Template

AP-3129-GLV
Anchor Bolt Cage,
1"-8NC

PB-5372-GLV
6" Foundation
Anchor

Aluminum Bases:

PB-5384-7.69
Rochester

AP-0802-7.75
Ornamental

AP-0816-7.81
Hamilton

AP-0817-8.00
Oxford

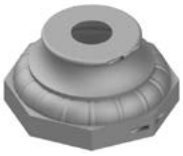

Note: 1. See Reference Section for available paint colors.
2. For more indepth information on Bases see page T15-25 through T15-29.
3. For Anchors see sections T11 and T12.

Simplex Roadway Luminaire Poles

The Simplex Roadway Luminaire Poles are available in 25′, 30′, 35′, and 40′ heights. They are provided with either 6′ or 8′ single or twin arms, fabricated with a 24″ rise. The steel tapered poles can accept a variety of decorative bases or be provided with simple nut covers.

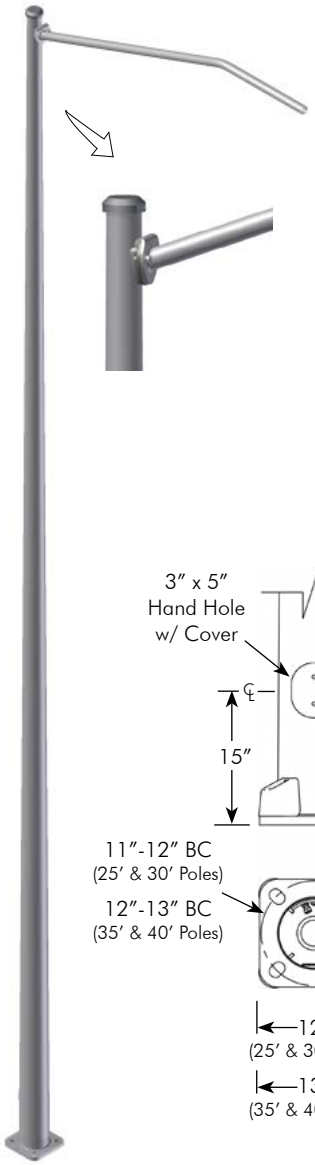

Pole Height	Arm Length	Arm	Part Number	Allowable EPA (ft^2) per arm at 90 mph with max. luminaire weight of 60 lbs	Allowable EPA (ft^2) per arm at 100 mph with max. luminaire weight of 60 lbs
25′-0″	6′-0″	Single	AP-8571-25-6	6.8	5.4
	8′-0″	Single	AP-8571-25-8	4.5	3.5
30′-0″	6′-0″	Single	AP-8571-30-6	6.5	5.2
	8′-0″	Single	AP-8571-30-8	4.3	3.3
35′-0″	6′-0″	Single	AP-8571-35-6	6.3	5.0
	8′-0″	Single	AP-8571-35-8	4.1	3.2
40′-0″	6′-0″	Single	AP-8571-40-6	6.1	4.8
	8′-0″	Single	AP-8571-40-8	4.0	3.1

Note:
Bolt/Nut Covers are available. Specify by adding -BC in the part number, i.e., AP-8571-30-6-BC-GLV.
EPA=Projected area of luminaire multiplied by coefficient of drag
Compliant with AASHTO 2013

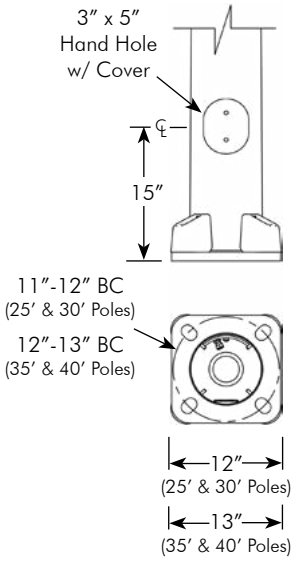

Anchors:

AP-1007-3-GLV
1″-8NC
(25′ & 30′ Poles)

AP-1020-GLV
1-1/4″-7NC
(35′ & 40′ Poles)

AP-3129-GLV
1″-8NC
(25′ & 30′ Poles)

AP-3146-GLV
1-1/4″-7NC
(35′ & 40′ Poles)

PB-5372-GLV
6″ Foundation Anchor
(25′, 30′, 35′, & 40′ Poles)

Aluminum Bases:

Pole Height	Base ID
25′	7.13″
30′	7.63″
35′	8.13″
40′	8.63″

PB-5384 Rochester

Pole Height	Base ID
25′	7.25″
30′	7.75″
35′	8.25″
40′	8.75″

AP-0802 Ornamental

Pole Height	Base ID
25′	7.31″
30′	7.88″
35′	N/A
40′	N/A

AP-0816 Hamilton

Pole Height	Base ID
25′	7.50″
30′	8.00″
35′	8.44″
40′	9.00″

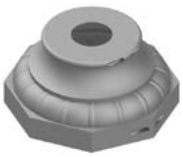

AP-0817 Oxford

Note: 1. See Reference Section for available paint colors.
2. For more indepth information on Bases see page T15-25 through T15-29.
3. For Anchors see sections T11 and T12.

ISO 9001 www.intlcert.com

Simplex Roadway Luminaire Poles

The Simplex Roadway Luminaire Poles are available in 25′, 30′, 35′, and 40′ heights. They are provided with either 6′ or 8′ single or twin arms, fabricated with a 24″ rise. The steel tapered poles can accept a variety of decorative bases or be provided with simple nut covers.

Pole Height	Arm Length	Arm	Part Number	Allowable EPA (ft^2) per arm at 90 mph with max. luminaire weight of 60 lbs	Allowable EPA (ft^2) per arm at 100 mph with max. luminaire weight of 60 lbs
25′-0″	6′-0″	Twin	AP-8572-25-6	6.8	5.4
	8′-0″	Twin	AP-8572-25-8	4.5	3.5
30′-0″	6′-0″	Twin	AP-8572-30-6	6.5	5.2
	8′-0″	Twin	AP-8572-30-8	4.3	3.3
35′-0″	6′-0″	Twin	AP-8572-35-6	6.3	5.0
	8′-0″	Twin	AP-8572-35-8	4.1	3.2
40′-0″	6′-0″	Twin	AP-8572-40-6	6.1	4.8
	8′-0″	Twin	AP-8572-40-8	4.0	3.1

Note:
Bolt/Nut Covers are available. Specify by adding -BC in the part number, i.e., AP-8572-30-6-BC-GLV.
EPA=Projected area of luminaire multiplied by coefficient of drag
Compliant with AASHTO 2013

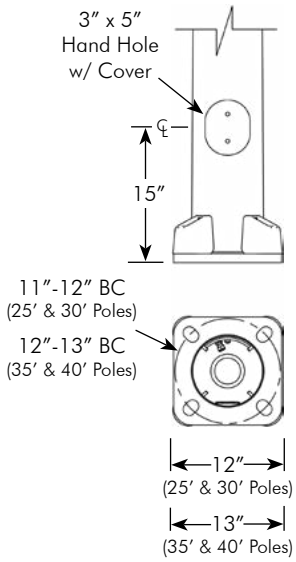

Anchors:

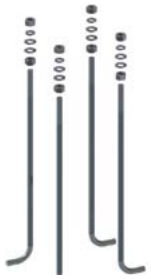

AP-1007-3-GLV
1″-8NC
(25′ & 30′ Poles)

AP-1020-GLV
1-1/4″-7NC
(35′ & 40′ Poles)

AP-3129-GLV
1″-8NC
(25′ & 30′ Poles)

AP-3146-GLV
1-1/4″-7NC
(35′ & 40′ Poles)

PB-5372-GLV
6″ Foundation Anchor
(25′, 30′, 35′, & 40′ Poles)

Aluminum Bases:

Pole Height	Base ID
25′	7.13″
30′	7.63″
35′	8.13″
40′	8.63″

PB-5384 Rochester

Pole Height	Base ID
25′	7.25″
30′	7.75″
35′	8.25″
40′	8.75″

AP-0802 Ornamental

Pole Height	Base ID
25′	7.31″
30′	7.88″
35′	N/A
40′	N/A

AP-0816 Hamilton

Pole Height	Base ID
25′	7.50″
30′	8.00″
35′	8.44″
40′	9.00″

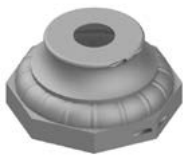

AP-0817 Oxford

Note: 1. See Reference Section for available paint colors.
2. For more indepth information on Bases see page T15-25 through T15-29.
3. For Anchors see sections T11 and T12.

This page is intentionally left blank.

ISO 9001
www.intlcert.com

ABS Plastic Bases

Pelco ABS Plastic Bases are manufactured from an ultraviolet inhibited material that provides protections against U.V. degradation which ensures years of lasting beauty. A variety of styles and sizes are available. Lightweight and easy installation.

Old Town I Base Assy, Black ABS Plastic 25" High x 9-1/4" Points

AP-0804 - [Top ID] - [Bottom ID] - PNC

Top ID: 3.5=3-1/2"
Bottom ID: 7.5=7-1/2"

Note: Top Opening: 3-1/2" max
Bottom Opening: 7-1/2" max

Rochester I Base Assy, Black ABS Plastic 41" High x 15-11/16" Across Points

AP-0803 - [Top ID] - [Bottom ID] - PNC

Top ID: 5.75=5-3/4"
Bottom ID: 12.0=12"

Note: Top Opening: 5-3/4" max
Bottom Opening: 12" max

Rochester II Base Assy, Black ABS Plastic 41" High x 19" Across Points

AP-0809 - [Top ID] - [Bottom ID] - PNC

Top ID: 9.0=9"
Bottom ID: 15.0=15"

Note: Top Opening: 9" max
Bottom Opening: 15" max

Hamilton Base Assy, Black ABS Plastic 21" High x 16-1/8" Base Dia

AP-0810 - [Top ID] - [Bottom ID] - PNC

Top ID: 6.5= 6-1/2"
Bottom ID: 14.5= 14-1/2"

Note: Top Opening: 6-1/2" max
Bottom Opening: 14-1/2" max

Note: 1. Refer to individual pole pages for cross reference for proper fit of base and pole.

Aluminum Bases

Pelco has several different Aluminum Base designs. A variety of styles and sizes are available to fit any specific requirement.

Old Town I Base Assy, Alum
23-1/2" High x 9-1/4" Across Points

AP-0801 - [Base ID] - [Coating]

Base ID: 2.38=2-3/8" | 2.88"=2-7/8" | 3.5=3-1/2"

Coating: PNC=Process No Color | P__=Paint

Note: Top Opening: 2-3/8" min to 3-1/2" max
Bottom Opening: 7-1/2" max

Country Club Base Assy, Alum
28" High x 13-5/8" OD

AP-0811 - [Base ID] - [Coating]

Base ID: 3.5=3-1/2" | 4.5=4-1/2" | 3F= 3" Fluted

Coating: PNC=Process No Color | P__=Paint

Note: Top Opening: 3-1/2" min to 4-1/2" max
Bottom Opening: 12" max

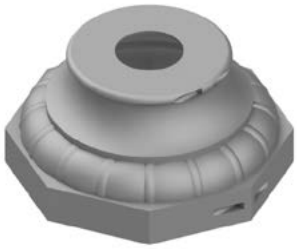

Oxford Base Assy, Alum
9" High x 19-1/4" Across Points

AP-0817 - [Base ID] - [Coating]

Base ID: 8.5= 8-1/2" | 4F=4" Fluted | 6F=6" Fluted

Coating: PNC=Process No Color | P__=Paint

Note: Top Opening: 3-1/2" min to 8-1/2" max
Bottom Opening: 17" max

Note: 1. See Reference Section for available paint colors.
2. Refer to individual pole pages for cross reference for proper fit of base and pole.

ISO 9001 www.intlcert.com

Aluminum Bases

Pelco has several different Aluminum Base designs. A variety of styles and sizes are available to fit any specific requirement.

Huntington Base Assy, Alum
15-3/4" High x 11-1/4" OD

AP-0820 - [Base ID] - [Coating]

Base ID: 3.5=3-1/2", 4.0=4"

Coating: PNC=Process No Color, P__=Paint

Note: Top Opening: 3" min to 4" max
Bottom Opening: 10-3/4" max

Manchester Base Assy w/ Door, Alum
27" High x 18-1/2" OD

AP-0819 - [Base ID] - [Coating]

Base ID: 4.0=4", 7.0=7", 4F=4" Fluted

Coating: PNC=Process No Color, P__=Paint

Note: Top Opening: 3" min to 4" max
Bottom Opening: 7" max

LeGrande Base Assy, Alum
38" High x 18-1/2" OD

AP-0814 - [Base ID] - [Coating]

Base ID: 3.5=3-1/2", 4.5=4-1/2", 5.5=5-1/2", 3F= 3" Fluted, 4F=4" Fluted

Coating: PNC=Process No Color, P__=Paint

Note: Top Opening: 3-1/2" min to 5-3/4" max
Bottom Opening: 17" max

Note: 1. See Reference Section for available paint colors.
2. Refer to individual pole pages for cross reference for proper fit of base and pole.

Aluminum Bases

Pelco has several different Aluminum Base designs. A variety of styles and sizes are available to fit any specific requirement.

Hamilton Base Assy, Alum
24" High x 18-1/2" OD

AP-0816 - [Base ID] - [Coating]

Base ID:
4.06=4-1/16"
4.5=4-1/2"
5.5=5-1/2"
8.5=8-1/2" (max)

Coating:
PNC=Process No Color
P_ _=Paint

Note: Top Opening: 4" min to 8-1/2" max
Bottom Opening: 16-3/4" max

Hamilton Base Assy, Alum
31-1/4" High x 18-1/2" OD

AP-0823 - [Base ID] - [Coating]

Base ID:
4.06=4-1/16"
4.5=4-1/2"
5.5=5-1/2"
8.5=8-1/2" (max)

Coating:
PNC=Process No Color
P_ _=Paint

Note: Top Opening: 4" min to 8-1/2" max
Bottom Opening: 16-3/4" max

Octagonal Base Assy, Alum
14-3/16" High x 17-13/16" Across Points

PB-5416 - [Base ID] - [Coating]

Base ID:
2.88=2-7/8"
3.5=3-1/2"
4=4"
4.5=4-1/2"
5= 5"

Coating:
PNC=Process No Color
P_ _=Paint

Note: Top Opening: 2-7/8" min to 5" max
Bottom Opening: 16" max

Octagonal Base Assy, for 4" Fluted Pole, Alum
14" High x 17-13/16" Across Points

PB-5414 - [Coating]

Coating:
PNC=Process No Color
P_ _=Paint

Note: Top Opening: 4" Fluted Only
Bottom Opening: 16" max

Note: 1. See Reference Section for available paint colors.
2. Refer to individual pole pages for cross reference for proper fit of base and pole.

ISO 9001 www.intlcert.com

Aluminum Bases

Pelco has several different Aluminum Base designs. A variety of styles and sizes are available to fit any specific requirement.

Rochester Base Assy, Alum
36" High x 28" Across Points

PB -5384 - [Base ID] - [Coating]

Base ID: 8.0=8" | 10.63=10-5/8" | 14.13=14-1/8" | 16"= 16"

Coating: PNC=Process No Color | P_ _=Paint

Note: Top Opening: 8" min to 16" max
Bottom Opening: 26" max

Ornamental Base Assy, Alum
32" High x 28-3/4" Across Points

AP-0802 - [Base ID] - [Trim] - [Coating]

Base ID: 8.0=8" | 10.0=10" | 12.0= 12"

Trim: T_ _=Trim Color

Coating: PNC=Process No Color | P_ _=Paint

Note: Top Opening: 6" min to 12" max
Bottom Opening: 23" max

Square Cover Assy, 2-Piece, Alum
5-1/4" High x 16" Square

PB-5399 - [Base ID] - [Coating]

Base ID: 4.5=4-1/2" | 6.8=6-13/16" | 7.5=7-1/2" | 8.0=8-1/2"

Coating: PNC=Process No Color | P_ _=Paint

Note: Top Opening: 4-1/2" min to 8-5/8" max
Bottom Opening: 15" max

Note: 1. See Reference Section for available paint colors.
2. Refer to individual pole pages for cross reference for proper fit of base and pole.

Lighting Arms

Pelco manufactures a variety of Lighting Arms that are available for single or twin luminaires. Both 1-5/8" and 2-3/8" diameter arms are availble in aluminum and steel.

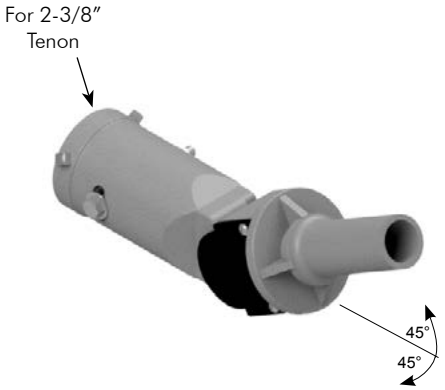

Lumi-Brac, 1-5/8" Dia Tenon, Adjustable View 2-3/8" OD Tenon Mount, Alum

SP-6350 - [ ]

Coating

PNC= Process No Color
P_ _=Paint

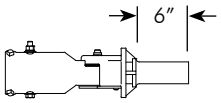

Note:
For mounting a single security light or Wi Fi antenna.

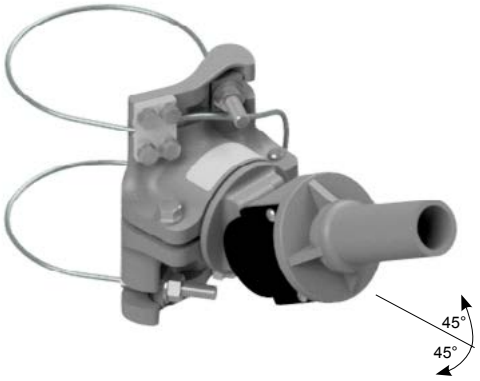

Lumi-Brac, 1-5/8" Dia Tenon, Adjustable View Cable Mount, Alum

SP-6351 - [ ] - [ ] - [ ]

Cable Length: See Note
Cable: Blank=Galv, SS=Stainless
Coating: PNC= Process No Color, P_ _=Paint

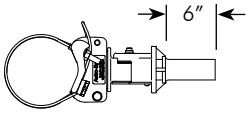

Note:
For mounting a single security light or Wi Fi antenna.
Cable Length: 62", 84", 96", 110", 120", 132", 144", 220", or 280".

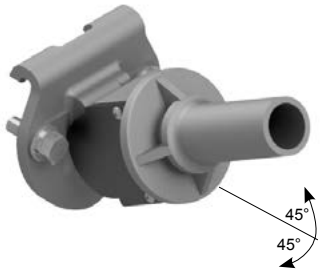

Lumi-Brac, 1-5/8" Dia Tenon, Adjustable View Simplex Mount, Alum

SP-6353 - [ ]

Coating

PNC= Process No Color
P_ _=Paint

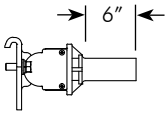

Note:
For mounting a single security light or Wi Fi antenna.
Cable Length: 62", 84", 96", 110", 120", 132", 144", 220", or 280".

Note: 1. See Reference Section for available paint colors.
2. See Reference Section page iv for cable clamp kit pole diameters.

Lighting Arms

Pelco manufactures a variety of Lighting Arms that are available for single or twin luminaires. Both 1-5/8" and 2-3/8" diameter arms are availble in aluminum and steel.

Mounting Bracket Assy, Single Luminaire Arm, 2-3/8" Dia, Galvanized Steel

SP-6282 - [ ]

Coating

GLV= Galvanized
P_ _=Paint

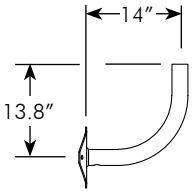

Note:
Bullhorn mounting brackets mount with an offset from the wood pole. Includes rubber grommet on the underneath side for wiring. Mounting hardware not included.

Mounting Bracket Assy, Double Luminaire Arm, 2-3/8" Dia, Galvanized Steel

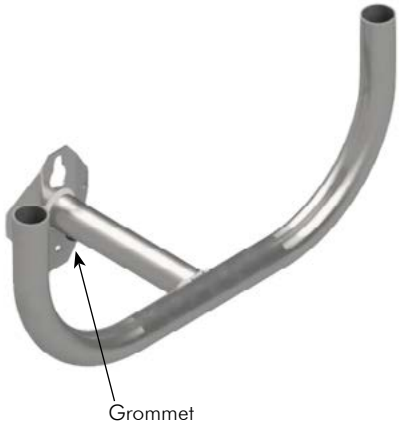

SP-6308 - [ ]

Coating

GLV= Galvanized
P_ _=Paint

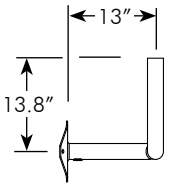

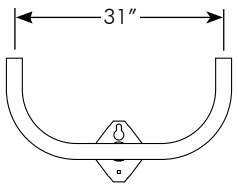

Note:
Bullhorn mounting brackets mount with an offset from the wood pole. Includes rubber grommet on the underneath side for wiring. Mounting hardware not included.

Note: 1. See Reference Section for available paint colors.

Lighting Arms

Pelco manufactures a variety of Lighting Arms that are available for single or twin luminaires. Both 1-5/8" and 2-3/8" diameter arms are availble in aluminum and steel.

Luminaire Support Arm, 1-5/8" Dia, Upsweep, Galvanized Steel

SP-6272 - [ ] Coating

GLV= Galvanized
P_ _=Paint

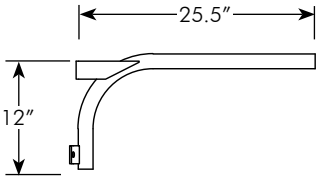

Note:
For mounting a single security light or Wi Fi antenna.
Mounting hardware not included.

Part Number	EPA (ft^2) per arm at 120 mph with max. luminaire weight of 30 lbs
SP-6348-16-PXX	3.0
SP-6348-24-PXX	2.0
SP-6348-30-PXX	3.6

Luminaire Mounting Arm, 1-5/8" Dia w/ Hardware, 1-5/8" Dia, Alum

SP-6348 - [ ] Arm Length - [ ] Coating

16=16"
24=14"
30=30"

PNC=Process No Color
P_ _=Paint

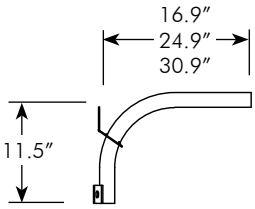

Note:
For mounting a single security light or Wi Fi antenna.
Includes three 3/8"-16 x 3" hex head lag bolts and flat washers.

Mounting Arm Assy, Flood Light, 2-3/8" OD, Galvanized Steel

SP-6349-GLV

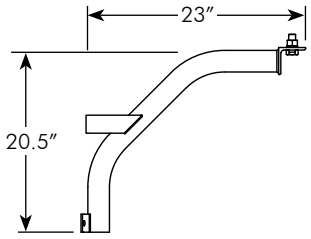

Note:
Mounting arm with a 2-3/8" OD pipe for mounting a single flood light with the 3/4"-10NC supplied hardware.

Note: 1. See Reference Section for available paint colors.

Lighting Arms

Pelco manufactures a variety of Lighting Arms that are available for single or twin luminaires. Both 1-5/8" and 2-3/8" diameter arms are availble in aluminum and steel.

Luminaire Mounting Arm, 2-3/8" OD 54" Rise, Galvanized Steel

SP-6309 - [ ] Coating

GLV=Galvanized
P_ _=Paint

Note:
For mouting a single luminaire on 2-3/8" OD x 6' schedule 10 pipe with a 54" rise. Mounting hardware not included. Galvanized or powder coated.

Luminaire Arm, Clamp-on for 4"-5" Dia Pole 2-3/8" Dia x 8" Tenon, 30" Rise, Steel

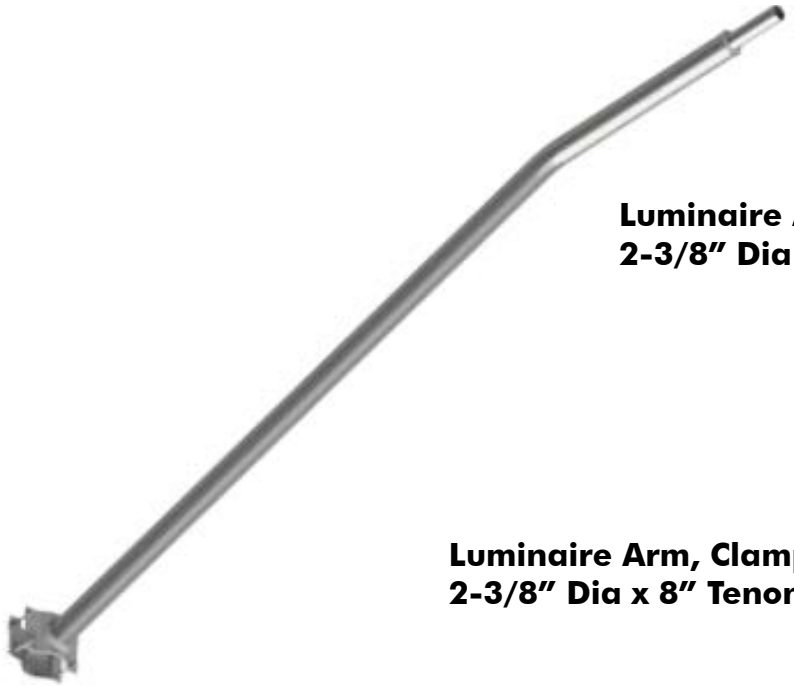

AP-3001 - [ ] Arm Length - [ ] Coating

72=6'
96=8'
120=10'
144=12'

GLV=Galvanized
P_ _=Paint

Luminaire Arm, Clamp-on for 5-1/2" to 7-1/2" Dia Pole 2-3/8" Dia x 8" Tenon, 30" Rise, Steel

AP-3002 - [ ] Arm Length - [ ] Coating

96=8'
120=10'
144=12'
180=15'

GLV=Galvanized
P_ _=Paint

Note:
For mounting a single luminaire onto the 2-3/8" OD x 8" long tenon. Includes 1/2"-13NC hardware for attaching arm to the pole. Galvanized or powder coated.

Note: 1. See Reference Section for available paint colors.

Light Shields

Light shields are mounted to the luminaire to prevent unwanted light enchroachment. Available in a natural aluminum color or painted to match the luminaire.

Light Shield, House Side for Mogul Socket, 2-1/4" Dia, Alum

Coating

AP-8433 - ☐

PNC= Process No Color
P_ _=Paint

Note:
Clamps onto the mogul base socket in the HID Bristol luminaire preventing unwanted light encroachment.

Light Shield, Security, Alum

Coating

SP-6013 - ☐

PNC= Process No Color
P_ _=Paint

Note:
Easily snaps onto most HID security lights preventing unwanted light encroachment.

Note: 1. See Reference Section for available paint colors.

Banner Brackets

Pelco has a wide variety of mounting bracket for banners and flags. Choose from ornamental hubs, banded mini-bracs, or flat mounted hubs. Banner bracs for square poles are also available, as well as articulating arms for collapsing against the pole when not in use.

Banner Mounting Bracket, Alum Hinged Single Arm,

SH-3551 - [Pole Dia] - [Banner Width] - [Finial/Color] - [Coating]

Pole Dia	Banner Width	Finial/Color	Coating
2.38=2-3/8"	18=18"	BL_ _=2" Ball	P_ _=Paint
2.88=2-7/8"	24=24"	ST_ _=Steeple	
3.50=3-1/2"	30=30"	SI_ _=Spire	
4.06=3" Fluted	36=36"	FL_ _=Fleur	
4.50=4-1/2"		SE_ _=1-1/2" Spear	
5.08=4" Fluted			
5.56=5-9/16"			

Note:
Finial may be ordered as P28 Gold or same color as assembly, i.e., SH-3551-3.50-24-BL28-P33, for Gold Ball finial and Gloss Black assembly.

Banner Mounting Bracket, Alum Hinged Articulating Single Arm

SH-3547 - [Pole Dia] - [Banner Width] - [Finial/Color] - [Coating]

Pole Dia	Banner Width	Finial/Color	Coating
2.38=2-3/8"	18=18"	BL_ _=2" Ball	P_ _=Paint
2.88=2-7/8"	24=24"	ST_ _=Steeple	
3.50=3-1/2"	30=30"	SI_ _=Spire	
4.06=3" Fluted	36=36"	FL_ _=Fleur	
4.50=4-1/2"		SE_ _=1-1/2" Spear	
5.08=4" Fluted			
5.56=5-9/16"			

Note:
Finial may be ordered as P28 Gold or same color as assembly, i.e., SH-3547-3.50-24-BL28-P33, for Gold Ball finial and Gloss Black assembly.

Banner Mounting Bracket, Alum Hinged Double Arm,

SH-3556 - [Pole Dia] - [Banner Width] - [Banner Width] - [Finial/Color] - [Coating]

Pole Dia	Banner Width	Banner Width	Finial/Color	Coating
2.38=2-3/8"	18=18"	18=18"	BL_ _=2" Ball	P_ _=Paint
2.88=2-7/8"	24=24"	20=21"	ST_ _=Steeple	
3.50=3-1/2"	30=30"	24=24"	SI_ _=Spire	
4.06=3" Fluted	36=36"	30=30"	FL_ _=Fleur	
4.50=4-1/2"		36=36"	SE_ _=1-1/2" Spear	
5.08=4" Fluted				
5.56=5-9/16"				

Note:
Finial may be ordered as P28 Gold or same color as assembly, i.e., SH-3556-3.50-24-24-BL28-P33, for Gold Ball finial and Gloss Black assembly.

Note: 1. See Reference Section for available paint colors.

Banner Brackets

Pelco has a wide variety of mounting bracket for banners and flags. Choose from ornamental hubs, banded mini-bracs, or flat mounted hubs. Banner bracs for square poles are also available, as well as articulating arms for collapsing against the pole when not in use.

Banner Mounting Bracket, Alum Band Mini-Brac

	Banner Width		BandLength/Painted		Finial/Color		Coating
SH-3520 -	☐	-	☐	-	☐	-	☐
	18=18″ 24=24″ 30=30″ 36=36″		29=29″ 42=42″ 29PB=29″ Painted 42PB=42″ Painted		BL_ _=2″ Ball ST_ _=Steeple SI_ _=Spire FL_ _=Fleur SE_ _=1-1/2″ Spear		P_ _=Paint

3″ Ball Steeple Spire Fleur Spear

Note:
Finial may be ordered as P28 Gold or same color as assembly, i.e., SH-3520-42PB-24-BL28-P33, for Gold Ball finial and Gloss Black assembly. If painted band is required, band will be painted same color as assembly.

Banner Mounting Bracket, Alum Band Mini-Brac, Articulating Arm

	Banner Width		Band Length/Painted		Finial/Color		Coating
SH-3525 -	☐	-	☐	-	☐	-	☐
	18=18″ 24=24″ 30=30″ 36=36″		29=29″ 42=42″ 29PB=29″ Painted 42PB=42″ Painted		BL_ _=2″ Ball ST_ _=Steeple SI_ _=Spire FL_ _=Fleur SE_ _=1-1/2″ Spear		P_ _=Paint

3″ Ball Steeple Spire Fleur Spear

Note:
Finial may be ordered as P28 Gold or same color as assembly, i.e., SH-3551-3.50-24-BL28-P33, for Gold Ball finial and Gloss Black assembly. If painted band is required, band will be painted same color as assembly.

Note: 1. See Reference Section for available paint colors.
2. See Reference Section for band clamp kit pole diameters.

Banner Brackets

Pelco has a wide variety of mounting bracket for banners and flags. Choose from ornamental hubs, banded mini-bracs, or flat mounted hubs. Banner bracs for square poles are also available, as well as articulating arms for collapsing against the pole when not in use.

3″ Ball Steeple Spire Fleur Spear

Banner Mounting Bracket, Alum Universal Hub Mount

SH-3523 - [Banner Width] - [Finial/Color] - [Coating]

Banner Width	Finial/Color	Coating
18=18″	BL_ _=2″ Ball	P_ _=Paint
24=24″	ST_ _=Steeple	
30=30″	SI_ _=Spire	
36=36″	FL_ _=Fleur	
	SE_ _=1-1/2″ Spear	

Note:
Finial may be ordered as P28 Gold or same color as assembly, i.e., SH-3523-24-BL28-P33, for Gold Ball finial and Gloss Black assembly.

3″ Ball Steeple Spire Fleur Spear

Banner Mounting Bracket, Alum For Square Poles, Articulating Arm

SH-3532 - [Pole Size] - [Banner Width] - [Finial/Color] - [Coating]

Pole Size	Banner Width	Finial/Color	Coating
4=4″ Square	18=18″	BL_ _=2″ Ball	P_ _=Paint
5=2-7/8″ Square	24=24″	ST_ _=Steeple	
6.63=6-5/8″ Square	30=30″	SI_ _=Spire	
	36=36″	FL_ _=Fleur	
		SE_ _=1-1/2″ Spear	

Note:
Finial may be ordered as P28 Gold or same color as assembly, i.e., SH-3532-4-24-BL28-P33, for Gold Ball finial and Gloss Black assembly.

Note: 1. See Reference Section for available paint colors.

Flag Mounts

Pelco has a wide variety of mounting bracket for banners and flags. Choose from ornamental hubs, banded mini-bracs, or flat mounted hubs. Banner bracs for square poles are also available, as well as articulating arms for collapsing against the pole when not in use.

Flag Mount, Hinged Articulating Serrated, Alum

SH-3549 - [Pole Dia] - [Coating]

Pole Dia:
2.88=2-7/8″
3.50=3-1/2″
4.06=3″ Fluted
4.50=4-1/2″
5.08=4″ Fluted
5.56=5-9/16″

Coating:
P_ _=Paint

Flag Mount, 2-Way Articulating Serrated, Alum

SH-3561 - [Pole Dia] - [Coating]

Pole Dia:
2.88=2-7/8″
3.50=3-1/2″
4.06=3″ Fluted
4.50=4-1/2″
5.08=4″ Fluted
5.56=5-9/16″

Coating:
P_ _=Paint

Flag Mount, Articulating Serrrated, Alum Band Mini-Brac

SH-3539 - [BandLength/Painted] - [Coating]

BandLength/Painted:
29=29″
42=42″
29PB=29″ Painted
42PB=42″ Painted

Coating:
P_ _=Paint

Note:
If painted band is required, band will be painted same color as assembly.

Flag Mount w/ Articulating Serated, Alum Universal Hub

SH-3538 - [Coating]

Coating:
P_ _=Paint

Note: 1. See Reference Section for available paint colors.
2. See Reference Section page for band clamp kit pole diameters.

ISO 9001
www.intlcert.com

Pole Accessories

Pelco has a wide variety of mounting bracket for banners and flags. Choose from ornamental hubs, banded mini-bracs, or flat mounted hubs. Banner bracs for square poles are also available, as well as articulating arms for collapsing against the pole when not in use.

3" Ball Steeple Spire Fleur Spear

Flag Rod Assy, Alum

	Rod Length		Finial/Color		Coating
AP-7380 -	☐	-	☐	-	☐

42=42"
52=52"

BL_ _=2" Ball
SE_ _=1-1/2" Spear
SI_ _=Spire
ST_ _=Steeple
FL_ _=Fleur

P_ _=Paint

Note:
finial may be ordered as P28 Gold or same color as assembly, i.e., AP-7380-42-ST28-P33, for Gold Ball Steeple finial and Gloss Black assembly.

Break-a-way Coupler, 1"-8NC, Alum For Banner Bracs

	Coating
AP-7239 -	☐

P_ _=Paint

Note: 1. See Reference Section for available paint colors.

Regulatory Signs
MUTCD Compliant

Stop Sign, R1-1 w/ Black Back

Size Reflectivity Coating

SF-6000 - [ ] - [ ] - PNC

24=24" DG3=Diamond Grade
30=30" EG=Engineering Grade

Yield Sign, R1-2 w/ Black Back

Size Reflectivity Coating

SF-2025 - [ ] - [ ] - PNC

30=30" DG3=Diamond Grade
36=36" EG=Engineering Grade

No Outlet Sign, W14-2 w/ Black Back

Size Reflectivity Coating

SF-2033 - [ ] - [ ] - PNC

36=36" DG3=Diamond Grade
EG=Engineering Grade

Dead End, W14-1 w/ Black Back

Size Reflectivity Coating

SF-2026 - [ ] - [ ] - PNC

24=24" DG3=Diamond Grade
30=30" EG=Engineering Grade

Curve Right Sign, W1-2R w/ Black Back

Size Reflectivity Coating

SF-2029 - [ ] - [ ] - PNC

24=24" DG3=Diamond Grade
EG=Engineering Grade

Curve Left Sign, W1-2L w/ Black Back

Size Reflectivity Coating

SF-2030 - [ ] - [ ] - PNC

24=24" DG3=Diamond Grade
EG=Engineering Grade

Speed Limit Sign, R1-1 18" x 24" w/ Black Back

Speed Limit Reflectivity Coating

SF-2015 - [ ] - [ ] - PNC

20=20MPH DG3=Diamond Grade
25=25MPH EG=Engineering Grade

Slow, Children at Play Sign, W9-12 18" x 24" w/ Black Back

Reflectivity Coating

SF-2022 - [ ] - PNC

DG3=Diamond Grade
EG=Engineering Grade

Note: 1. Standard Regulatory signs are 0.080" thick.
2. FHWA in the 2009 MUTCD has made numerous changes in both the R numbers and their related sign designs. Therefore, careful review of the current sign design and it's R number should be made for every MUTCD compliant Pelco sign part number before ordering.

ISO 9001 www.intlcert.com

Regulatory Signs
MUTCD Compliant

1-Way Sign, R6-1
36" x 12" w/ Black Back

Arrow Reflectivity Coating

SF-2016 - [ ] - [ ] - PNC

L=Left
R=Right

DG3=Diamond Grade
EG-Engineering Grade

3-Way Sign, R1-3a
12" x 6" w/ Black Back

Reflectivity Coating

SF-2027 - [ ] - PNC

DG3=Diamond Grade
EG=Engineering Grade

4-Way Sign, R1-3
12" x 6" w/ Black Back

Reflectivity Coating

SF-2023 - [ ] - PNC

DG3=Diamond Grade
EG=Engineering Grade

Parking Sign, R7-8
12" x 18" w/ Black Back

Reflectivity Coating

SF-2031 - [ ] - PNC

DG3=Diamond Grade
EG=Engineering Grade

Note: 1. Standard Regulatory signs are 0.080" thick.
2. FHWA in the 2009 MUTCD has made numerous changes in both the R numbers and their related sign designs. Therefore, careful review of the current sign design and it's R number should be made for every MUTCD compliant Pelco sign part number before ordering.

ISO 9001
www.intlcert.com

Custom Signs

Pelco has custom signs available in the sizes below, which include white engineering grade reflective legend on the powder coat color of your choice.

Sign, 12" Wide x Height w/ 2 Mounting Holes
Powder Coat Background, White Reflective Legend

SF-5031 - [Height] - [Coating]

Height: 09=9" 12=12" 18=18"

Coating: P__=Paint

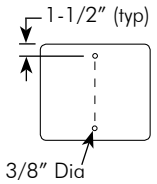

Sign, 18" Wide x Height w/ 2 Mounting Holes
Powder Coat Background, White Reflective Legend

SF-5016 - [Height] - [Additional Vinyl] - [Coating]

Height: 18=18" 24=24" 30=30"

Additional Vinyl: Blank=None RD=Red

Coating: P__=Paint

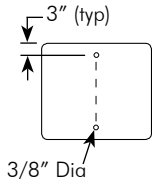

Sign, 24" Wide x Height w/ 2 Mounting Holes
Powder Coat Background, White Reflective Legend

SF-5027 - [Height] - [Coating]

Height: 18=18" 24=24" 30=30" 36=36"

Coating: P__=Paint

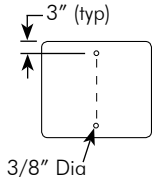

Sign, 24" Wide x Height w/ 4 Mounting Holes
Powder Coat Background, White Reflective Legend

SF-5028 - [Height] - [Coating]

Height: 18=18" 24=24" 30=30" 36=36"

Coating: P__=Paint

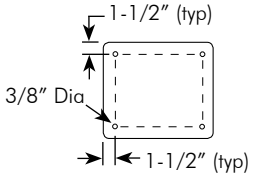

Note: 1. See Reference Section for available paint colors.
2. Specify sign legend when ordering.

Sign Frames

Pelco offers both a decorative and a back plate option for framing your sign, in sizes shown below.

Decorative Detail

Sign Frame, Decorative Alum
24" Octagonal Stop Sign

AP-7013-1 - Coating ☐ P__=Paint

Sign Frame, Decorative Alum
30" Octagonal Stop Sign

AP-7012-1 - Coating ☐ P__=Paint

Back Plate Frame, Alum
24" Octagonal Stop Sign

SH-1849 - Coating ☐ P__=Paint

Back Plate Frame, Alum
30" Octagonal Stop Sign

SH-1850 - Coating ☐ P__=Paint

Decorative Detail

Sign Frame, Decorative Alum
24" x 24" Regulatory Sign

AP-7237 - Coating ☐ P__=Paint

Decorative Detail

Sign Frame, Decorative Alum
24" x 18" Regulatory Sign

AP-7228 - Coating ☐ P__=Paint

Decorative Detail

Sign Frame, Decorative Alum
18" x 24" Regulatory Sign

AP-7027 - Coating ☐ P__=Paint

Decorative Detail

Sign Frame, Decorative Alum
12" x 18" Regulatory Sign

AP-7215 - Coating ☐ P__=Paint

Note: 1. See Reference Section for available paint colors.

ISO 9001
www.intlcert.com

Post Tops

Both finial caps and rigid sign mounting caps are available for 2″ and 2-1/2″ posts.

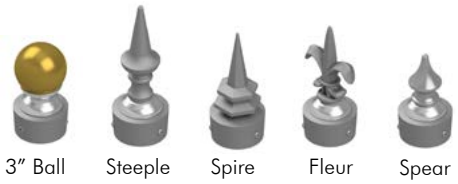

Post Cap Assy, Alum
For 2″ (2-3/8″ OD) Pole SH-1808 - [ ] - [ ]

Post Cap Assy, Alum
For 2-1/2″ (2-7/8″ OD) Pole SH-1828 - [ ] - [ ]

Finial/Color: BL_ _=2″ Ball, ST_ _=Steeple, SI_ _=Spire, FL_ _=Fleur, SE_ _=1-1/2″ Spear
Coating: P_ _=Paint

Note:
Finial may be ordered as P28 Gold or same color as assembly, i.e., SH-1808-BL28-P33, for Gold Ball finial and Gloss Black assembly.

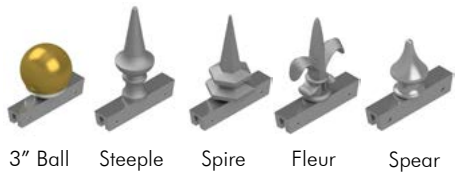

Finial Assy, Alum
w/ Slot for Extruded Blades SH-1813 - [ ] - [ ]

Finial/Color: BL_ _=2″ Ball, ST_ _=Steeple, SI_ _=Spire, FL_ _=Fleur, SE_ _=1-1/2″ Spear
Coating: P_ _=Paint

Note:
Finial may be ordered as P28 Gold or same color as assembly, i.e., SH-1813-BL28-P33, for Gold Ball finial and Gloss Black assembly.

Post Cap Assy, Alum
For 2″ (2-3/8″ OD) Pole SH-1609 - [ ]

Coating: P_ _=Paint

Post Cap Assy, Alum
w/ 5″ Long Slot for Extruded Blades
For 2″ (2-3/8″ OD) Pole SH-1800 - [ ]

Coating: P_ _=Paint

Post Cap Assy, Alum
w/ 5″ Long Slot for Extruded Blades
For 2-1/2″ (2-7/8″ OD) Pole SH-1829 - [ ]

Coating: P_ _=Paint

Post Cap Assy, Alum
w/ 12″ Long Slot for Extruded Blades
For 2″ (2-3/8″ OD) Pole SH-1845 - [ ]

Coating: P_ _=Paint

Post Cap Assy, Alum
w/ 12″ Long Slot for Extruded Blades
For 2-1/2″ (2-7/8″ OD) Pole SH-1868 - [ ]

Coating: P_ _=Paint

90 Cross, Alum
w/ 5″ Lg Slots for Extruded Blade SH-1801 - [ ]

Coating: P_ _=Paint

90 Cross, Alum
w/ 12″ Long Slot for Extruded Blades SH-1847 - [ ]

Coating: P_ _=Paint

Note: 1. See Reference Section for available paint colors.

Street Name Signage - Post Top

Pelco's Street Name Signs are available in several sizes and shapes, and either a post top or rigid cantilever mount. Choose powder coated with engineering grade reflective vinyl or high intensity diamond grade reflective signs.

6" Street Name Sign, Post Top Mount Extruded Blade Powder Coat Background, White Reflective Legend

SF-5011 - [Length] - [Coating]

Length: 24=24″, 30=30″, 36=36″, 42=42″, 48=48″

Coating: P_ _=Paint

SF-5020 - [Length] - [Coating]

Length: 24=24″, 30=30″, 36=36″, 42=42″, 48=48″

Coating: P_ _=Paint

SF-5071 - [Length] - [Coating]

Length: 24=24″, 30=30″, 36=36″, 42=42″, 48=48″

Coating: P_ _=Paint

6" Street Name Sign, Post Top Mount Extruded Blade Reflective Background, White Reflective Legend

SF-5000 - [Length] - [Reflectivity] - PNC

Length: 24=24″, 30=30″, 36=36″, 42=42″, 48=48″

Reflectivity: DG3GR=Diamond Grade Green, DG3BR=Diamond Grade Brown, DG3BL=Diamond Grade Blue

SF-5034 - [Length] - [Reflectivity] - PNC

Length: 24=24″, 30=30″, 36=36″, 42=42″, 48=48″

Reflectivity: DG3GR=Diamond Grade Green, DG3BR=Diamond Grade Brown, DG3BL=Diamond Grade Blue

SF-5081 - [Length] - [Reflectivity] - PNC

Length: 24=24″, 30=30″, 36=36″, 42=42″, 48=48″

Reflectivity: DG3GR=Diamond Grade Green, DG3BR=Diamond Grade Brown, DG3BL=Diamond Grade Blue

Note: 1. See Reference Section for available paint colors.
2. Specify sign legend when ordering.

ISO 9001 www.intlcert.com

Street Name Signs - Rigid Cantilever

Pelco's Street Name Signs are available in several sizes and shapes, and either a post top or rigid cantilever mount. Choose powder coated with engineering grade reflective vinyl or high intensity diamond grade reflective signs.

6" Street Name Sign, Rigid Cantilever Mount
Powder Coat Background, White Reflective Legend

SF-5008 - [Length] - RM - [Coating]

Length: 24=24″, 30=30″, 36=36″, 42=42″, 48=48″

Coating: P_ _=Paint

SF-5033 - [Length] - RM - [Coating]

Length: 24=24″, 30=30″, 36=36″, 42=42″, 48=48″

Coating: P_ _=Paint

6" Street Name Sign, Rigid Cantilever Mount
Reflective Background, White Reflective Legend

SF-5007 - [Length] - [Reflectivity] - RM - PNC

Length: 24=24″, 30=30″, 36=36″, 42=42″, 48=48″

Reflectivity: DG3GR=Diamond Grade Green, DG3BR =Diamond Grade Brown, DG3BL =Diamond Grade Blue

SF-5032 - [Length] - [Reflectivity] - RM - PNC

Length: 24=24″, 30=30″, 36=36″, 42=42″, 48=48″

Reflectivity: DG3GR=Diamond Grade Green, DG3BR =Diamond Grade Brown, DG3BL =Diamond Grade Blue

Note: 1. See Reference Section for available paint colors.
2. Specify sign legend when ordering.

Street Name Signage - Post Top

Pelco's Street Name Signs are available in several sizes and shapes, and either a post top or rigid cantilever mount. Choose powder coated with engineering grade reflective vinyl or high intensity diamond grade reflective signs.

9" Street Name Sign, Post Top Mount Extruded Blade
Powder Coat Background, White Reflective Legend

SF-5048 - [Length] - [Coating]

Length:
24=24"
30=30"
36=36"
42=42"
48=48"

Coating:
P_ _=Paint

9" Street Name Sign, Post Top Mount Extruded Blade
Reflective Background, White Reflective Legend

SF-5047 - [Length] - [Reflectivity] - Coating: PNC

Length:
24=24"
30=30"
36=36"
42=42"
48=48"

Reflectivity:
DG3GR=Diamond Grade Green
DG3BR =Diamond Grade Brown
DG3BL =Diamond Grade Blue

Note: 1. See Reference Section for available paint colors.
2. Specify sign legend when ordering.

ISO 9001 www.intlcert.com

Street Name Signs - Rigid Cantilever

Pelco's Street Name Signs are available in several sizes and shapes, and either a post top or rigid cantilever mount. Choose powder coated with engineering grade reflective vinyl or high intensity diamond grade reflective signs.

9" Street Name Sign, Rigid Cantilever Mount
Powder Coat Background, White Reflective Legend

SF-5046 - [Length] - RM - [Coating]

Length: 24=24" 30=30" 36=36" 42=42" 48=48"

Coating: P_ _=Paint

SF-5042 - [Length] - RM - [Coating]

Length: 24=24" 30=30" 36=36" 42=42" 48=48"

Coating: P_ _=Paint

9" Street Name Sign, Rigid Cantilever Mount
Reflective Background, White Reflective Legend

SF-5045 - [Length] - [Reflectivity] - RM - PNC

Length: 24=24" 30=30" 36=36" 42=42" 48=48"

Reflectivity: DG3GR=Diamond Grade Green, DG3BR =Diamond Grade Brown, DG3BL =Diamond Grade Blue

SF-5041 - [Length] - [Reflectivity] - RM - PNC

Length: 24=24" 30=30" 36=36" 42=42" 48=48"

Reflectivity: DG3GR=Diamond Grade Green, DG3BR =Diamond Grade Brown, DG3BL =Diamond Grade Blue

Note: 1. See Reference Section for available paint colors.
2. Specify sign legend when ordering.

Sign Clamps

Pelco offers a variety of clamps for mounting signs to the side of a post. U-bolt, sign clamp, mini-brac and ornamental hub are options in various sizes. For additional sign mounting options see section T6.

U-Bolt Sign Clamp Assy, Alum w/ 5/16" Sign Mounting Hardware

SH-0206 - [Pole Size] - [Coating]

Pole Size:
1.5=1.5" (1-7/8" OD)
2=2" (2-3/8" OD)
2.5=2.5" (2-7.8" OD)
4=4.5" (4-1/2" OD)

Coating:
PNC=Process No Color
P_ _=Paint

U-Bolt Sign Clamp Assy, Alum w/ 5/16" Sign Mounting Hardware For Ornamental Sign Frames

SH-0227 - [Pole Size] - [Coating]

Pole Size:
1.5=1.5" (1-7/8" OD)
2=2" (2-3/8" OD)
2.5=2.5" (2-7.8" OD)
4=4.5" (4-1/2" OD)

Coating:
PNC=Process No Color
P_ _=Paint

Double Sign Clamp Assy, Alum w/ 5/16" Sign Mounting Hardware

SH-0203 - [Pole Size] - [Coating]

Pole Size:
1.5=1.5" (1-7/8" OD)
2=2" (2-3/8" OD)
2.5=2.5" (2-7.8" OD)
4=4.5" (4-1/2" OD)

Coating:
PNC=Process No Color
P_ _=Paint

Note: 1. See Reference Section for available paint colors.
2. See section T6 for additonal sign mounting options.

ISO 9001 www.intlcert.com

Sign Clamps

Pelco offers a variety of clamps for mounting signs to the side of a post. U-bolt, sign clamp, mini-brac and ornamental hub are options in various sizes. For additional sign mounting options see section T6.

Sign Clamp Assy, Alum w/ 5/16" Sign Mounting Hardware

	Pole Size		Coating
SH-0201 -	3	-	☐
	3=3" (3-1/2" OD)		PNC=Process No Color P_ _=Paint

Double Sign Clamp Assy, Alum w/ 5/16" Sign Mounting Hardware

	Pole Size		Coating
SH-0202 -	3	-	☐
	3=3" (3-1/2" OD)		PNC=Process No Color P_ _=Paint

Sign Mount Assy, Astro Mini-Brac, Alum w/ 5/16" Sign Mounting Hardware

	Band Length		Coating
SH-0228 -	☐	-	☐
	29=29" Band 42=42" Band 29PB=29" Painted Band 42PB=42" Painted Band		PNC=Process No Color P_ _=Paint

Sign Mount Assy, Ornamental Hub, Alum w/ 5/16" Sign Mounting Hardware

	Pole Dia		Coating
SH-0215 -	☐	-	☐
	2.88=2-7/8" 3.50=3-1/2" 4.06=3" Fluted 4.50=4-1/2" 5.08=4" Fluted 5.56=5-9/16"		PNC=Process No Color P_ _=Paint

Note: 1. See Reference Section for available paint colors.
2. See Reference Section for band clamp kit pole diameters.

Cantilever Sign Mounts

Pelco Cantilever Sign Mounts are available with a hinged ornamental hub, banded mini-brac, or universal hub and come in various lengths with decorative finial options.

Street Name Sign Bracket, Alum Hinged Ornamental Hub, Single Arm

AP-7362 - [Pole Dia] - [Sign Length] - [Finial/Color] [Coating]

Pole Dia	Sign Length	Finial/Color	Coating
2.38=2-3/8″	24=24″	BL_ _=2″ Ball	P_ _=Paint
2.88=2-7/8″	30=30″	ST_ _=Steeple	
3.50=3-1/2″	36=36″	SI_ _=Spire	
4.06=3″ Fluted	42=42″	FL_ _=Fleur	
4.50=4-1/2″	48=48″	SE_ _=1-1/2″ Spear	
5.08=4″ Fluted			
5.56=5-9/16″			

3″ Ball Steeple Spire Fleur Spear

Note:
Shown with ball finial. Finial may be ordered as P28 Gold or same color as assembly, i.e., AP-7362-3.50-24-BL28-P33, for Gold Ball finial and Gloss Black assembly.

Street Name Sign Bracket, Ornamental Hub, Alum Hinged Ornamental Hub, Double Arm

AP-7369 - [Pole Dia] - [Sign Length] - [Sign Length] - [Finial/Color] - [Coating]

Pole Dia	Sign Length	Sign Length	Finial/Color	Coating
2.38=2-3/8″	24=24″	24=24″	BL_ _=2″ Ball	P_ _=Paint
2.88=2-7/8″	30=30″	30=30″	ST_ _=Steeple	
3.50=3-1/2″	36=36″	36=36″	SI_ _=Spire	
4.06=3″ Fluted	42=42″	42=42″	FL_ _=Fleur	
4.50=4-1/2″	48=48″	48=48″	SE_ _=1-1/2″ Spear	
5.08=4″ Fluted				
5.56=5-9/16″				

3″ Ball Steeple Spire Fleur Spear

Note:
Shown with ball finial. Finial may be ordered as P28 Gold or same color as assembly, i.e., AP-7369-3.50-24-24-BL28-P33, for Gold Ball finial and Gloss Black assembly.

Note: 1. See Reference Section for available paint colors.

ISO 9001 www.intlcert.com

Cantilever Sign Mounts

Pelco Cantilever Sign Mounts are available with a hinged ornamental hub, banded mini-brac, or universal hub and come in various lengths with decorative finial options.

Street Name Sign Bracket, Alum Mini-Brac w/ Stainless Steel Bands

AP-7268 - [Sign Length] - [BandLength/Painted] - [Finial/Color] - [Coating]

Sign Length	BandLength/Painted	Finial/Color	Coating
24=24″	29=29″	BL_ _=2″ Ball	P_ _=Paint
30=30″	42=42″	ST_ _=Steeple	
36=36″	29PB=29″ Painted	SI_ _=Spire	
42=42″	42PB=42″ Painted	FL_ _=Fleur	
48=48″		SE_ _=1-1/2″ Spear	

3″ Ball Steeple Spire Fleur Spear

Note:
Shown with ball finial. Finial may be ordered as P28 Gold or same color as assembly, i.e., SH-3551-3.50-24-BL28-P33, for Gold Ball finial and Gloss Black assembly.
If painted band is required, band will be painted same color as assembly.

Street Name Sign Bracket, Alum Universal Hub

SH-3510 - [Sign Length] - [Finial/Color] - [Coating]

Sign Length	Finial/Color	Coating
24=24″	BL_ _=2″ Ball	P_ _=Paint
30=30″	ST_ _=Steeple	
36=36″	SI_ _=Spire	
42=42″	FL_ _=Fleur	
48=48″	SE_ _=1-1/2″ Spear	

3″ Ball Steeple Spire Fleur Spear

Note:
Shown with ball finial. Finial may be ordered as P28 Gold or same color as assembly, i.e., SH-3510-24-BL28-P33, for Gold Ball finial and Gloss Black assembly.

Note: 1. See Reference Section for available paint colors.
2. See Reference Section band clamp kit pole diameters.

Sign Posts

Pelco offers a 2-3/8" and 2-7/8" steel sign post in various length. For additional pole options and details of bases shown below see section T15.

Sign Post, 2-3/8" OD Steel, Direct Bury

PB -5208- [Height] - [Coating]

Height:
06=6'
08=8'
10=10'
12=12'
15=15'

Coating:
P_ _=Paint

ABS Bases:

AP-0804
Old Towne I

AP-0803
Rochester I

AP-0810
Hamilton

Aluminum Bases:

AP-0801
Old
Towne I

AP-0807
Old
Towne II

Note: 1. See Reference Section for available paint colors.
2. For more indepth information on Bases see page T15-25 through T15-29.
3. For Anchors see sections T11 and T12.

ISO 9001
www.intlcert.com

Sign Posts

Pelco offers a 2-3/8" and 2-7/8" steel sign post in various length. For additional pole options and details of bases shown below see section T15.

Sign Post, 2-7/8" OD Steel, Direct Bury

AP-2072- [Height] - [Coating]

Height: 06=6′, 08=8′, 10=10′, 12=12′, 15=15′

Coating: P_ _=Paint

ABS Bases:

AP-0804
Old Towne I

AP-0803
Rochester I

AP-0810
Hamilton

Aluminum Bases:

AP-0801
Old
Towne I

AP-0807
Old
Towne II

AP-0820
Huntington

Note: 1. See Reference Section for available paint colors.
2. For more indepth information on Bases see page T15-25 through T15-29.
3. For Anchors see sections T11 and T12.